BARBERBOSS

QR-5087

Importer: Elite Capital Limited
Address: Studio 4 Clarks Courtyard, 145 Granville Street, Birmingham, B1 1SB, United Kingdom.
Website: barberboss.co.uk
Email: care@barberboss.co.uk

User Instructions

ABOUT THE PRODUCT:

The Electric Callus Remover allows for a more accurate, gentle, and non-painful removal of dead skin.

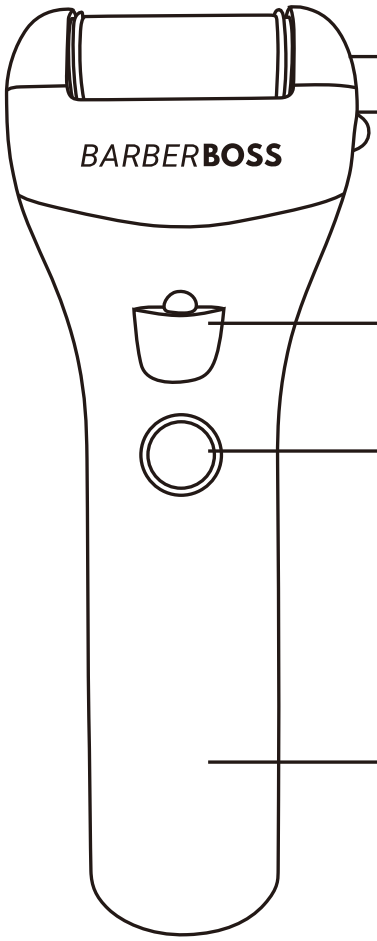

1.Unique Rollers Grinding Head

2.Release Button

3.LED Light

4.On/Off Switch

5.LED display screen



6.Cleaning Brush

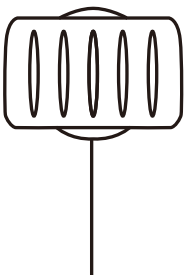

7.Protective Cover



8.USB Charging Cord

OPERATING INSTRUCTIONS:

Charging steps: Insert one head of USB cable into the charging hole of the body connect the other end to the (5v1a) computer/power bank/car charger USB socket. And the charging indicator light will come on. Charging will be completed in about 3 hours.
(Charging time should not exceed 12 hours).

Assemble and remove grinding head:

- Replace the grinding head according to the following operation. The grinding head can be selected and replaced according to the roughness of the skin and the expected effect.
- Before replacing the grinding head make sure the power supply is disconnected and the machine is shut down.

1.As shown in figures, use one hand to hold the head of product and the other hand to press the grinding head release button. Then the grinding head will be released and can then be removed. (fig1and fig2)

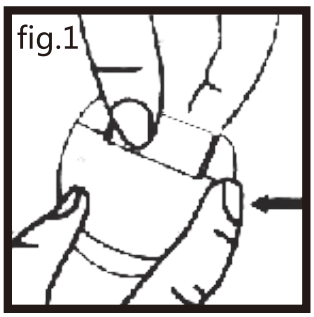

fig.1

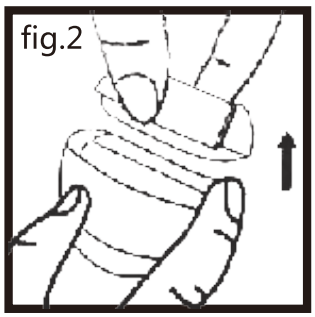

fig.2

2. When replacing the grinding head, put a new grinding head into the product until you hear a "click". Make sure that the newly installed grinding head is in place. If the grinding head is not connected well, do not press the product button. Note: when opening the package, 1 grinding head has been installed on the body.

Exfoliating:

This product is designed for use on dry and rough feet or heel skin not on other parts of the body.

1. Ensure sufficient power of the product.
2. Make sure the quartz grinding head is installed in this product. If removing and replacing the grinding head, please refer to the usage preparation in the previous section.
3. Clean or soften the skin and dry the applied area to ensure the best results.

Note: Do not use if there are cuts or bleeding on the skin.

4. Press the switch.
5. Gently hold the grinding head to stay in the dry and rough skin area for 2-3 seconds. Do not press too tightly and let the grinding head gently glide across the skin. If you press too tight, force too much, this product will stop working. You can stop to check if the exfoliation is satisfactory during use, if not, you can use it to this area again, until the skin is smooth and delicate.

Warning: Do not use the callus remover immediately, if the skin becomes painful or inflamed. Warning: Do not apply to any part of the skin for more than 2-3 seconds.

6. Please turn off the product after use.
7. Rinse skin or use a wet towel to remove excess cutting.
8. Clean the product after use. See the cleaning section.
9. Please keep the product in a dry and ventilated shady place.

SAFETY PRECAUTIONS:

- This product is designed to remove coarse & callused skin from feet & heels.
- Do not use anywhere else on the body.
- Do not use on broken or bleeding skin.
- Only use the appliance in the way indicated in these instructions.
- Inform potential users of these instructions.
- Never leave the appliance unsupervised when in use.
- The appliance must be used only for its intended purpose. No responsibility can be taken for any damage caused by incorrect use or improper handling.
- Children and persons with disabilities are not always aware of the danger posed using appliances.
- This electrical appliance cannot be used as a child's toy.
- Young children can only use it under the supervision and guidance.
- This product can only be used as household appliances not for industrial purposes.

- This product cannot be used in the production of corrosive or explosive gas and other special environment.

DEVICE CLEANING:

1. Remove the grinding head and clean the cuttings in the callus remover with cleaning brush.
2. The grinding head can be cleaned with water separately to remove the cuttings in the grinding head. After finishing wipe the machine with a cloth and dry it. The machine's whole body can be washed.
3.Note: the product must be off and make sure that it is disconnected with the charging cable and socket.

Three kinds of grinding head

1. Fine grinding head: suitable for calluses, dead skin and delicate skin care.
2. Medium grinding head: suitable for newly formed calluses and normal skin care.
3. Rough grinding head: suitable for years of accumulation of thick calluses and harder skin care.

DEVICE STORAGE:

Ensure the unit is completely cool and dry.
Keep the appliance in a cool, dry place and out of reach from children.

Technical Parameters:

Charging voltage: 5V
Charging time: Appr.3 hours
Using time: Appr.120 minutes
Please save this instruction for future reference.
Product name: Electric callus remover
Battery capacity: 1200mAh lithium battery Rated power:3W
Voltage: 5V
Electric current: 1A
Function: with light
Accessories: 3 different roller head cleaning brush, USB cable

Environmental Protection & Recycling:

Do not throw away the product with normal household waste at the end of its life, but hand it in at an official collection point for recycling. By doing this, you help to preserve the environment.
This product contains a built-in rechargeable battery which shall not be disposed of with normal household waste.
Follow your country's rules for the separate collection of electrical and electronic products and rechargeable batteries. Correct disposal helps prevent negative consequences for the environment and human health.

Removing the rechargeable battery

Only remove the rechargeable battery when you discard the product. Before you remove the battery, make sure that the product is disconnected from the wall socket and that the battery is completely empty.
Press the callus remover button until the callus remover stops working and drains the battery.
Take any necessary safety precautions when you handle tools to open the product and when you dispose of the rechargeable battery

