END LIFT OTTOMAN BED ASSEMBLY INSTRUCTIONS

Thank you for purchasing the END LIFT OTTOMAN BED.
Please read the instructions carefully to ensure safe operation of the product.

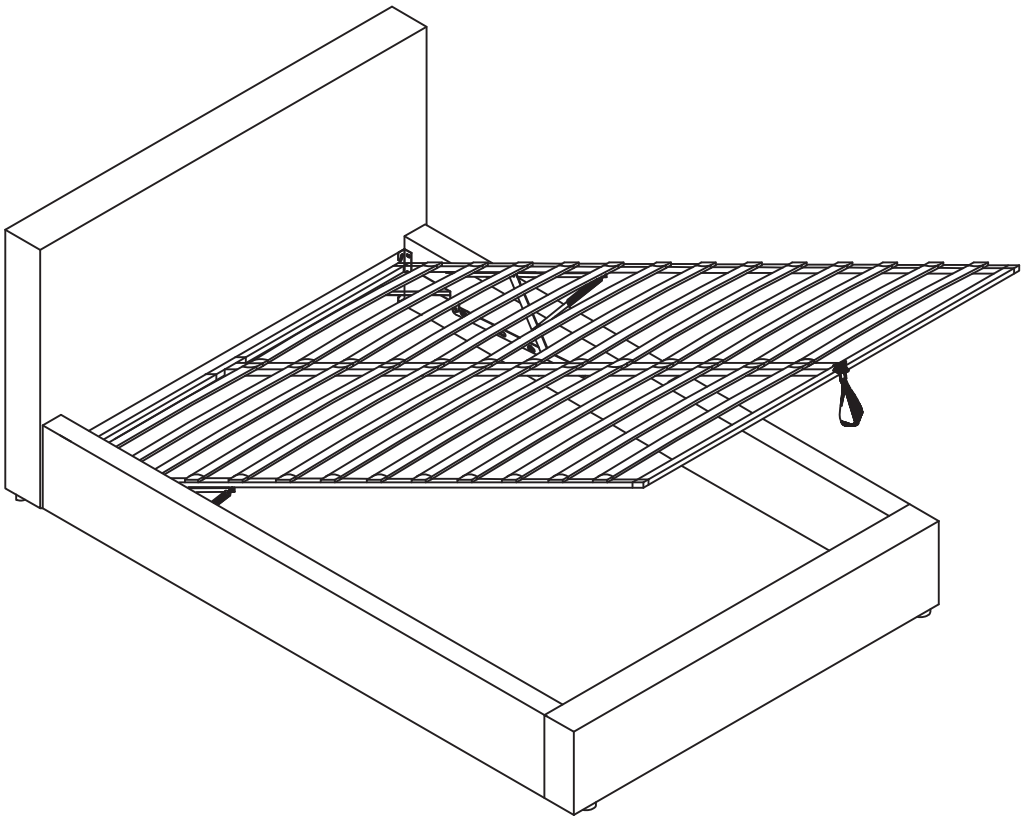

2010mm×1060mm×840mm	3ft	SINGLE
2010mm×1360mm×840mm	4ft	SMALL DOUBLE
2010mm×1510mm×840mm	4ft 6	DOUBLE
2110mm×1660mm×840mm	5ft	KING

Crushed Velvet / Soft Velvet / Corduroy

PLEASE READ this sheet prior to assembly to familiarise yourself with the various stages of construction.

Carefully open the pack supplied and check the contents against the parts and fittings check list.
Do not destroy any of the packaging until you are certain that you have all the necessary parts for the assembly.

CAUTION:There are small components used in the construction of this unit.These loose items should be kept away from young children whilst assembling your unit to avoid the danger of choking hazards.

Tools Required

5mm Allen key x 1

4mm Allen key x 1

Spanner x 1

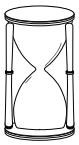

1.5 Hour
Set Up

END LIFT OTTOMAN BED ASSEMBLY INSTRUCTIONS

IMPORTANT - READ CAREFULLY - RETAIN THESE INSTRUCTIONS FOR FUTURE REFERENCE.

INFORMATION

- Due to the size of this product we recommend that it is assembled in the room intended for use.
- When you are ready to start, make sure that you have the right tools, plenty of space and a clean, dry area for assembly.
- Unwrap all packaging materials and place the components on top of the carton box or on a clean floor to prevent it from scratching.
- Check the pack and make sure you have all the parts listed.
- Ensure that this product is fully assembled and secured as illustrated before use.
- Check all screws or bolts are tightened and inspect regularly.
- This product should only be used on firm, level ground.
- Please dismantle for transportation
- Tools are included.

WARNINGS

- Only use the storage compartment when the frame is fully raised in the up position.
- DO make sure the legs remain in contact with the ground.
- DO keep small parts out of reach of children.
- DO use caution when operating,this bed uses a pressured mechanism.
- DO keep hands and fingers clear of the mechanism when opening and closing the bed for use.
- DO NOT use power tools to construct this product.
- DO NOT tighten screws until fully assembled.
- DO NOT over tighten screws or bolts.
- DO NOT use this product if parts are missing, damaged or worn.
- DO NOT stand on the product.
- DO NOT remain on the bed whilst the lifting mechanism is in use.
- DO NOT expose this product to dripping or splashing,rain or areas with heavy moisture.
- DO NOT place any objects filled with liquids,such as vases,on the product.
- DO NOT insert foreign objects filled with liquids,such as vases,on the product.
- DO NOT insert foreign objects into the product or attempt to repair this unit by yourself.
- DO NOT place the product in direct sunlight,open flames such as candles or heat,such as radiators. Keep away from temperatures over 35 ºC.

CARE INFORMATION

- Never use scourers, abrasives or chemical cleaners.
- To clean wipe with a sponge and warm soapy water. Do not use solvent based cleaners or detergents as they can bleach or damage the product.

Product Description	Bed frame type	Slat quantity	Max Mattress Height CM	Max Mattress Width CM	Max Mattress Length CM	Max Mattress Weight KG	Piston Rating N	Max body weight perside KG
END 90CM OTTOMAN BED	Metal	26	20	90	190	45	750N	110
END 120CM OTTOMAN BED	Metal	26	20	120	190	45	750N	110
END 135CM OTTOMAN BED	Metal	26	20	135	190	45	750N	110
END 150CM OTTOMAN BED	Metal	30	20	150	200	45	750N	110

END LIFT OTTOMAN BED ASSEMBLY INSTRUCTIONS

Please check the pack contents before assembling the product.If any components are missing,please contact your retailer.The fittings pack contains small items that should be kept away from small children.

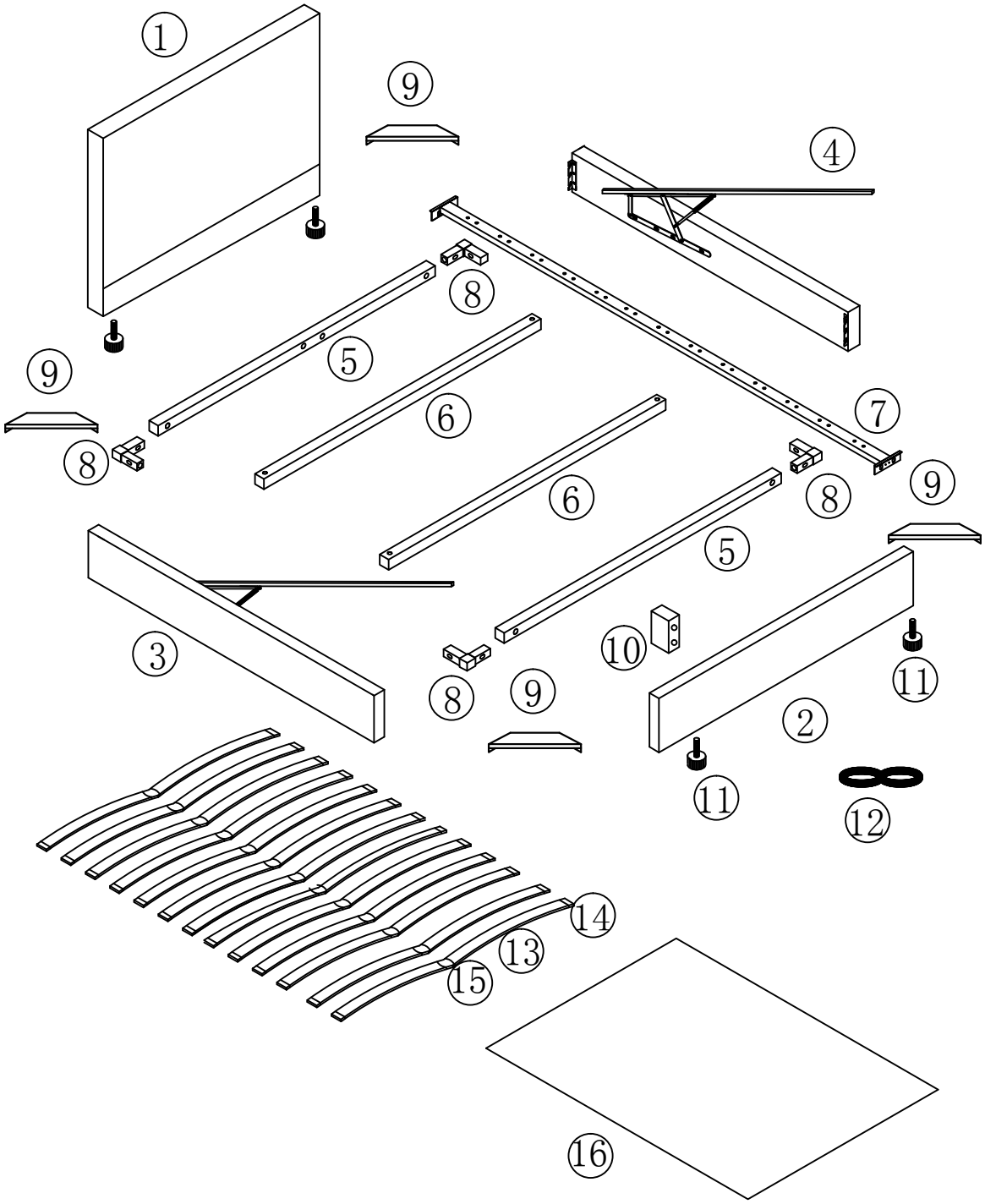

END LIFT OTTOMAN BED ASSEMBLY INSTRUCTIONS

Parts

1 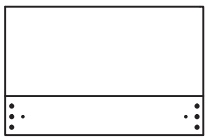	2	3
Description: HEADBOARD QTY: 1PC Carton No: 1 of 2	Description: FOOTBOARD QTY: 1PC Carton No: 1 of 2	Description: LEFT SIDE RAIL QTY: 1PC Carton No: 2 of 2
4	5	6
Description: RIGHT SIDE RAIL QTY: 1PC Carton No: 2 of 2	Description: FRONT / BACK FRAME RAIL QTY: 2PCS Carton No: 1 of 2	Description: HORIZONTAL FRAME RAIL QTY: 2PCS Carton No: 1 of 2
7 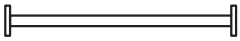	8	9 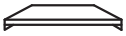
Description: CENTRE FRAME RAIL QTY: 1PC Carton No: 2 of 2	Description: PLASTIC BRACKET SETS QTY: 4PCS Carton No: 1 of 2	Description: CORNER BRACKETS QTY: 4PCS Carton No: 1 of 2
10	11	12
Description: HOLDING BLOCKS QTY: 1PC Carton No: 1 of 2	Description: ADJUSTABLE LEGS QTY: 4PCS Carton No: 1 of 2	Description: BELT QTY: 1PC Carton No: 1 of 2
13	14	15
Description: BENT SLATS QTY: 4'6": 26 PCS / 5': 30 PCS Carton No: 1 of 2	Description: PLASTIC SLAT CAPS QTY: 4'6": 26 PCS / 5': 30 PCS Carton No: 1 of 2	Description: CENTRE SLAT CAPS QTY: 4'6": 13PCS / 5': 15PCS Carton No: 1 of 2
16		
Description: WOVEN FABRIC QTY: 1PC Carton No: 1 of 2		

END LIFT OTTOMAN BED ASSEMBLY INSTRUCTIONS

Fixings (to scale)

Ref	Dimensions	Qty
A	Bolt-M8x25	12
B	Bolt-M6x15	12
C	Bolt-M6x40	4
D	Flat Washer-Ø8x16	12
E	Spring Washer-Ø8x13	12
F	Bolt-M6x65	2
G	Nut-M8x13	2

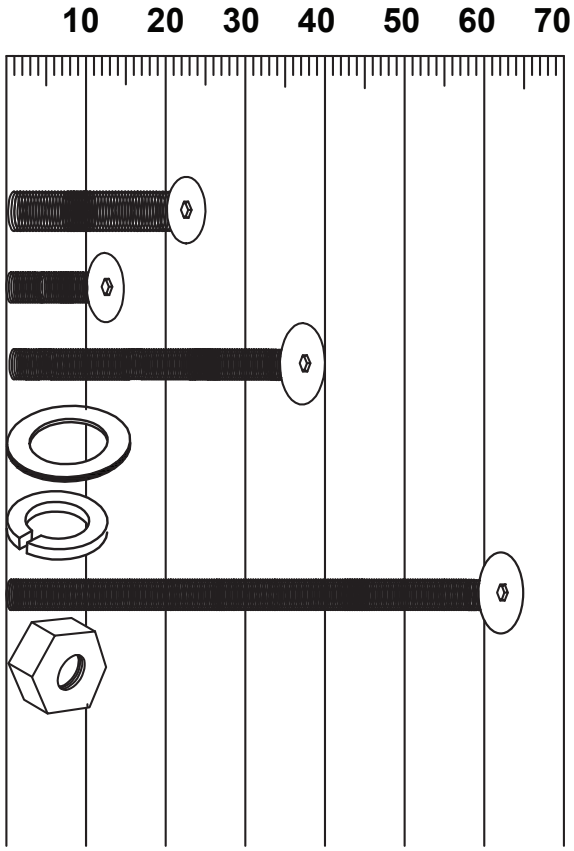

(Not to scale)

H	4mm Allen Key	1
I	5mm Allen Key	1
J	Spanner	1

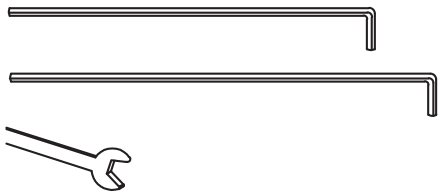

CAUTION: There are many small components used in the construction of this product. Please keep these components away from young children whilst assembling this product.

If you keep the fittings in a bowl during assembly you will be less likely to lose them!

END LIFT OTTOMAN BED ASSEMBLY INSTRUCTIONS

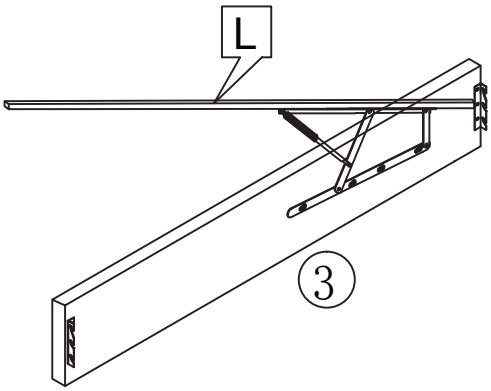

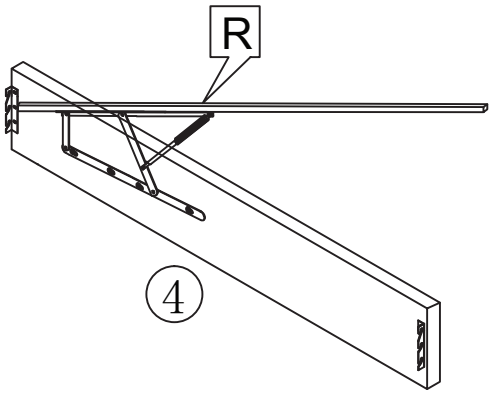

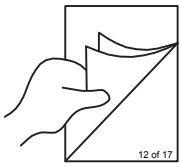

Turn to page 12 for fitting the hinges

IMPORTANT PISTON INFORMATION

The pistons used in the construction of this product are extremely strong and cannot be operated by hand when not fitted to the ottoman hinges. All pistons are tested in the factory for correct pressure and operation before use.

Initially it might appear that the pistons are very stiff when opening and closing the ottoman frame, THIS IS NORMAL.

After operating the ottoman a few times, the movement of the pistons and the opening and closing of the ottoman will become easier.

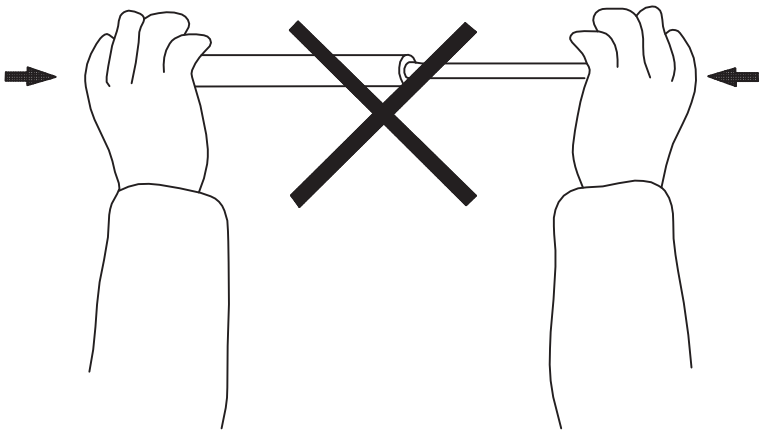

Hints and Tips

To close the ottoman,always use 2 hands at arms length and only where illustrated on this product .You must ensure the mattress is on the bed frame before lifting the mechanism. **Failure to do so may result in injury. Use the lifting strap to open the ottoman.**

To ensure your safety please do not stand too close in case the frame bounces up.The weight of the mattress loaded on the frame will keep the frame in a lower position until it is pulled upwards by the user.

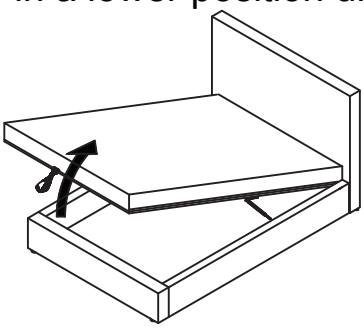

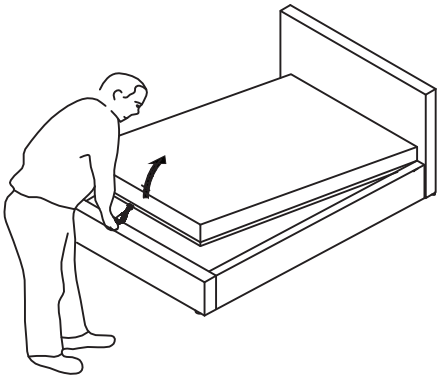

If removing the mattress, make sure the frame is secured so it does not flip open. When lifting the bed frame,remove pillows and covers.

PLEASE NOTE - It takes a lot of force to make the initial movement of the ottoman - **THIS IS A DESIGN FEATURE OF THE PRODUCT SO THAT IT DOES NOT FALL SHUT** - and the nearer to being closed the ottoman is, the easier it is to move. When the ottoman is almost shut, keep the fingers and hands clear and it will close completely under its own weight.

When lowering the slat unit for the first time, take care to make sure it does not rub unevenly on the inside face of the Side Rail. If it does, the bed has been assembled slightly out of square. This can be rectified by moving the Footboard of the bed slightly to the left or right whilst leaving the headboard of the bed frame stationary.

END LIFT OTTOMAN BED ASSEMBLY INSTRUCTIONS

Do not attempt to move the bed whilst the frame is in the upright positon.

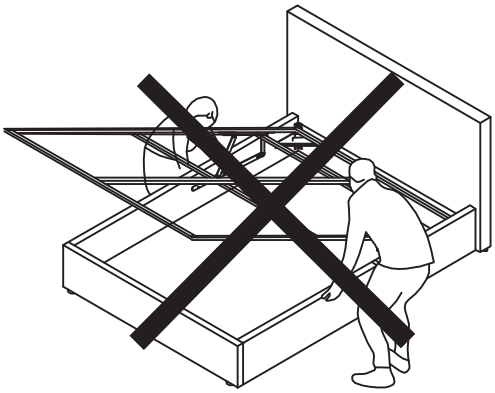

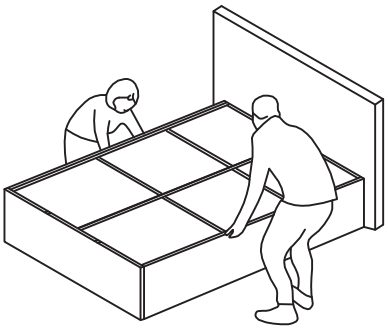

Layout Parts on Soft Surface

Lay out all 4 sides on a soft surface i.e. Rug, Carpet or Packaging Carton.

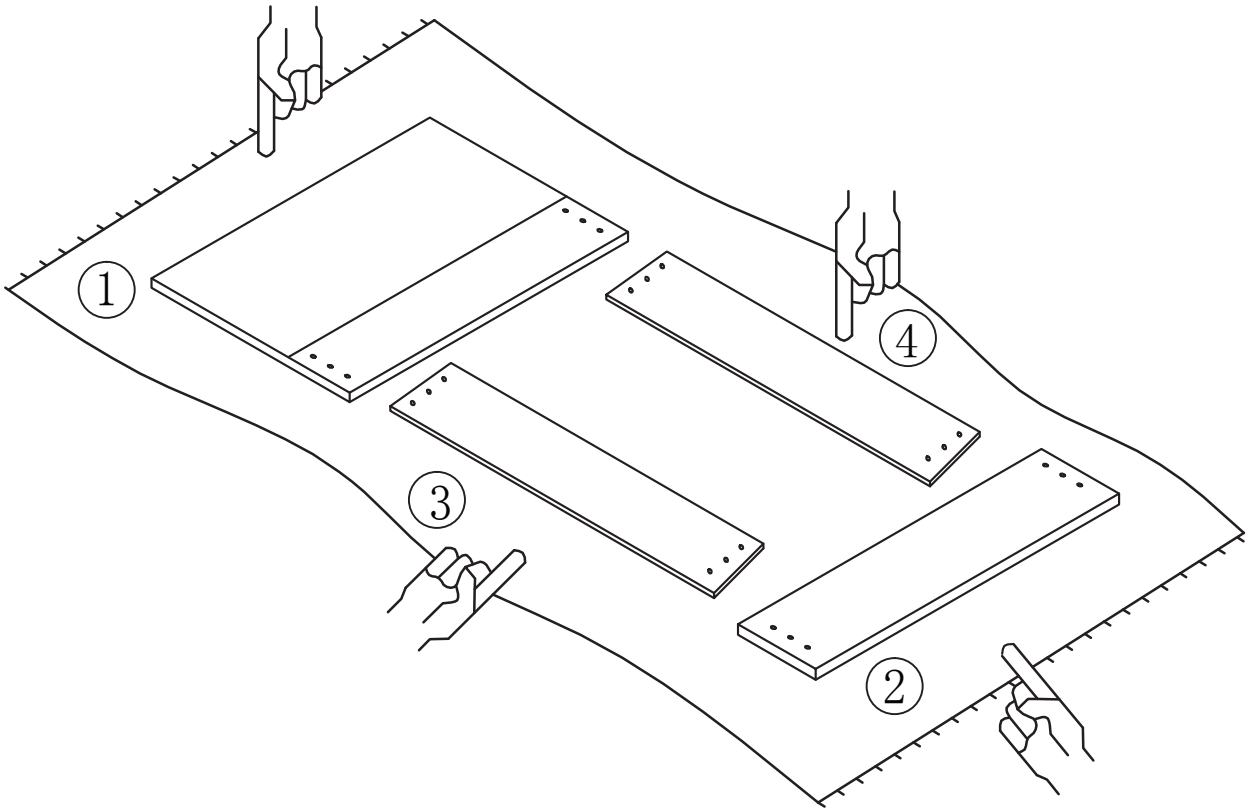

END LIFT OTTOMAN BED ASSEMBLY INSTRUCTIONS

Step 1

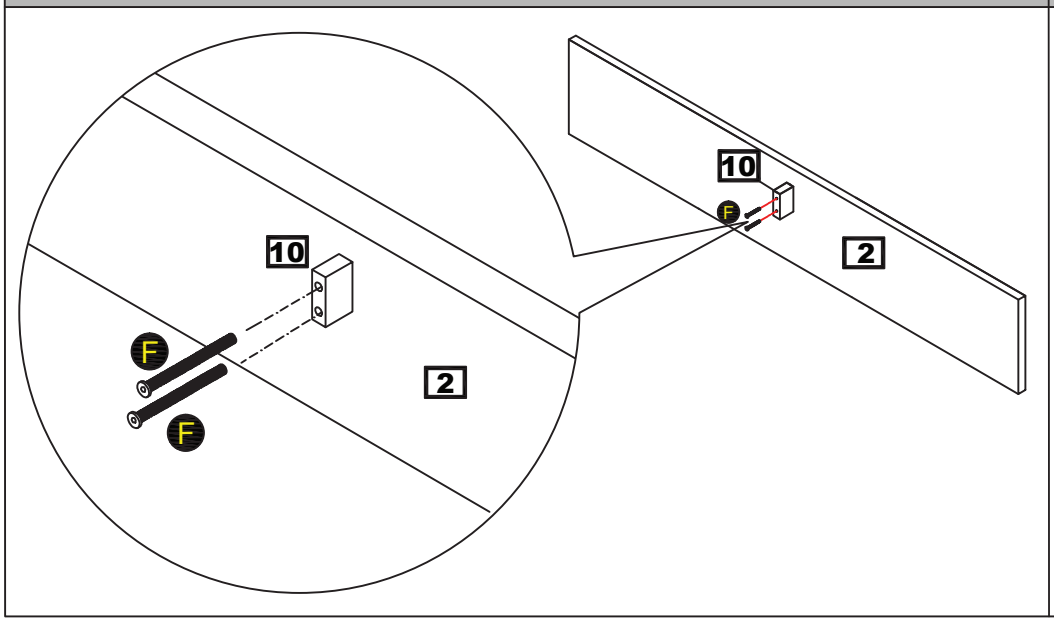

Parts Required

- 2 Footboard x 1
- 10 Holding blocks x 1
- F 65mm M6 Bolt x 2
- H 4mm Allen key

Step 2

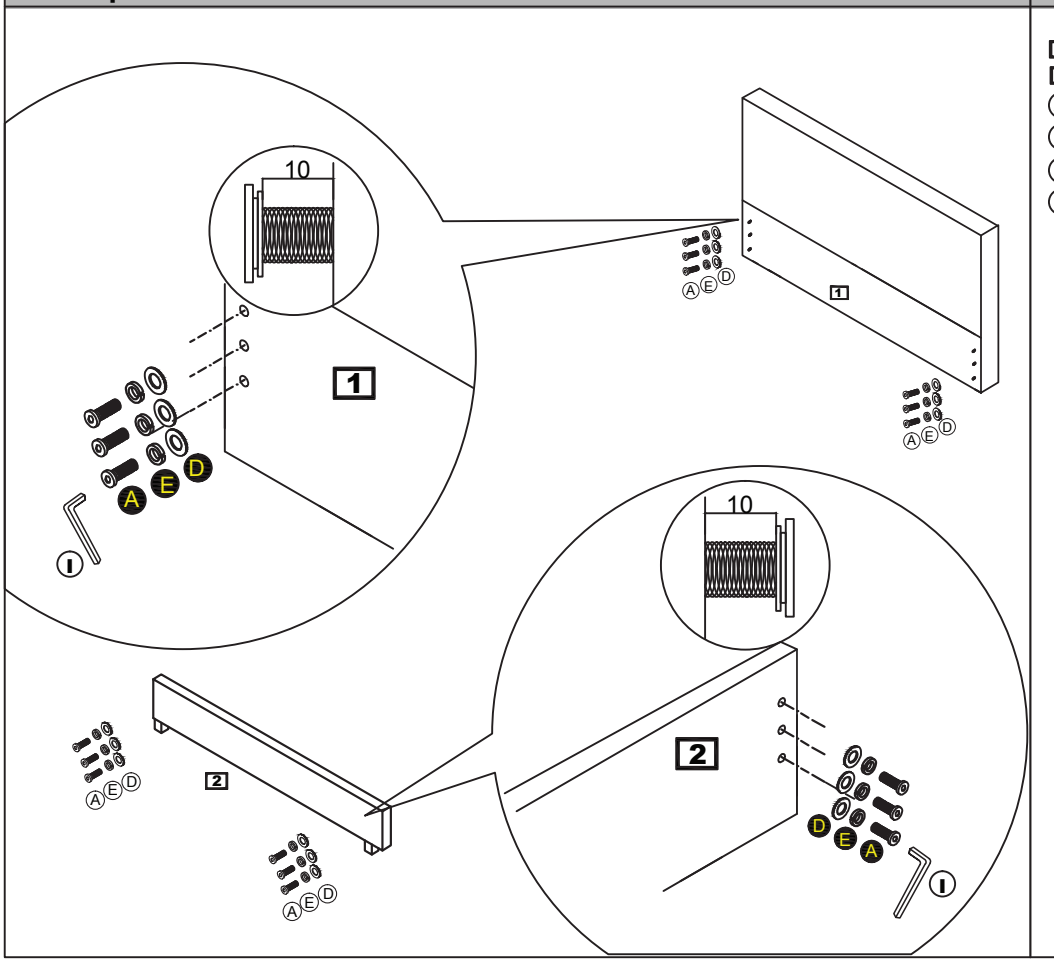

Parts Required

- 1 Headboard x 1
- 2 Footboard x 1
- A 25mm M8 Bolt x 12
- E Spring washer x 12
- D Flat washer x 12
- I 5mm Allen key

END LIFT OTTOMAN BED ASSEMBLY INSTRUCTIONS

Step 3

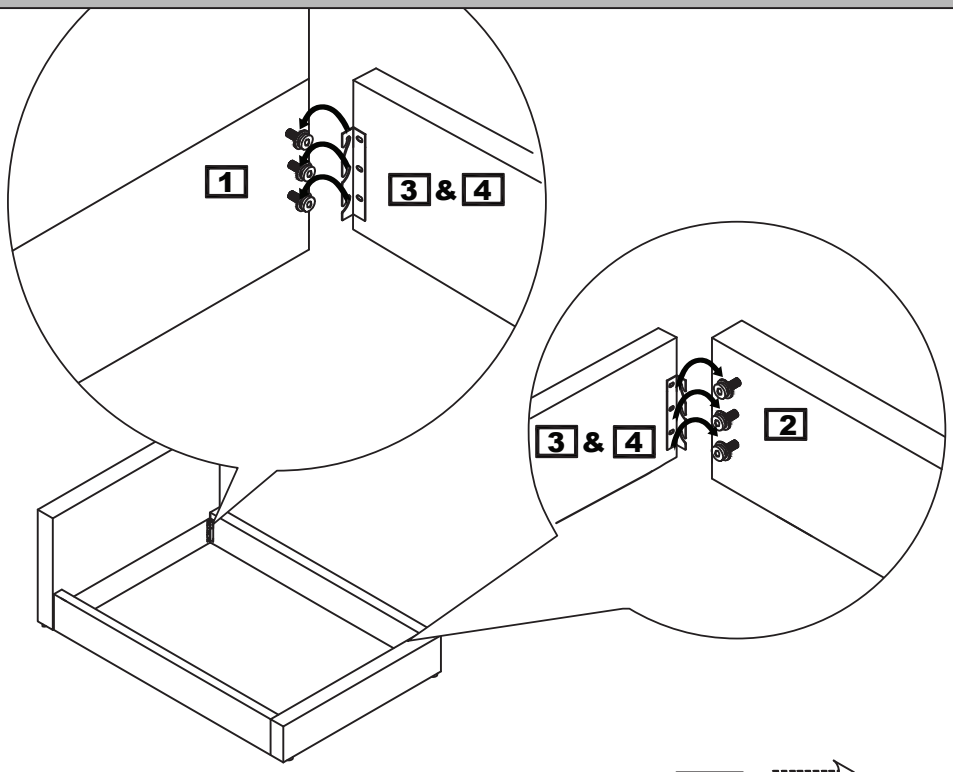

MAKE CERTAIN THE BED IS SQUARE AS SHOWN.
Note:THEN tighten all bolts 100% using allen key

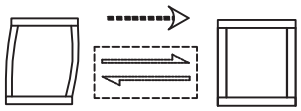

Parts Required

- 1 Headboard x 1
- 2 Footboard x 1
- 3 Left side rail x 1
- 4 Right side rail x 1
- I 5mm Allen key

Step 4

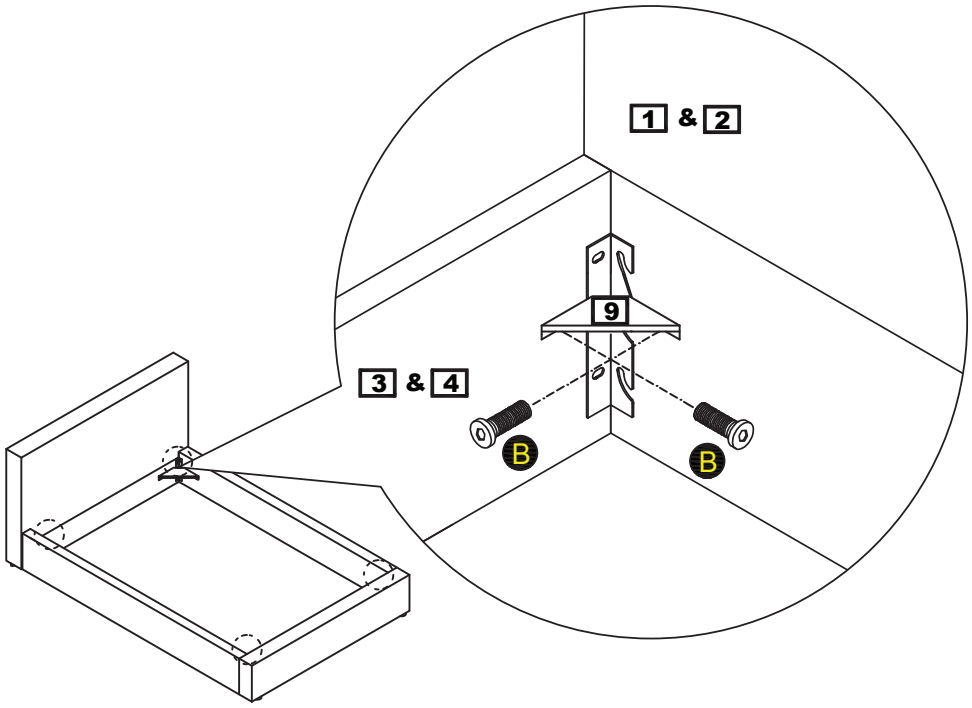

Parts Required

- 1 Headboard x 1
- 2 Footboard x 1
- 3 Left side rail x 1
- 4 Right side rail x 1
- 9 Corner brackets x 4
- B 15mm M6 Bolt x8
- H 4mm Allen key

END LIFT OTTOMAN BED ASSEMBLY INSTRUCTIONS

Step 5

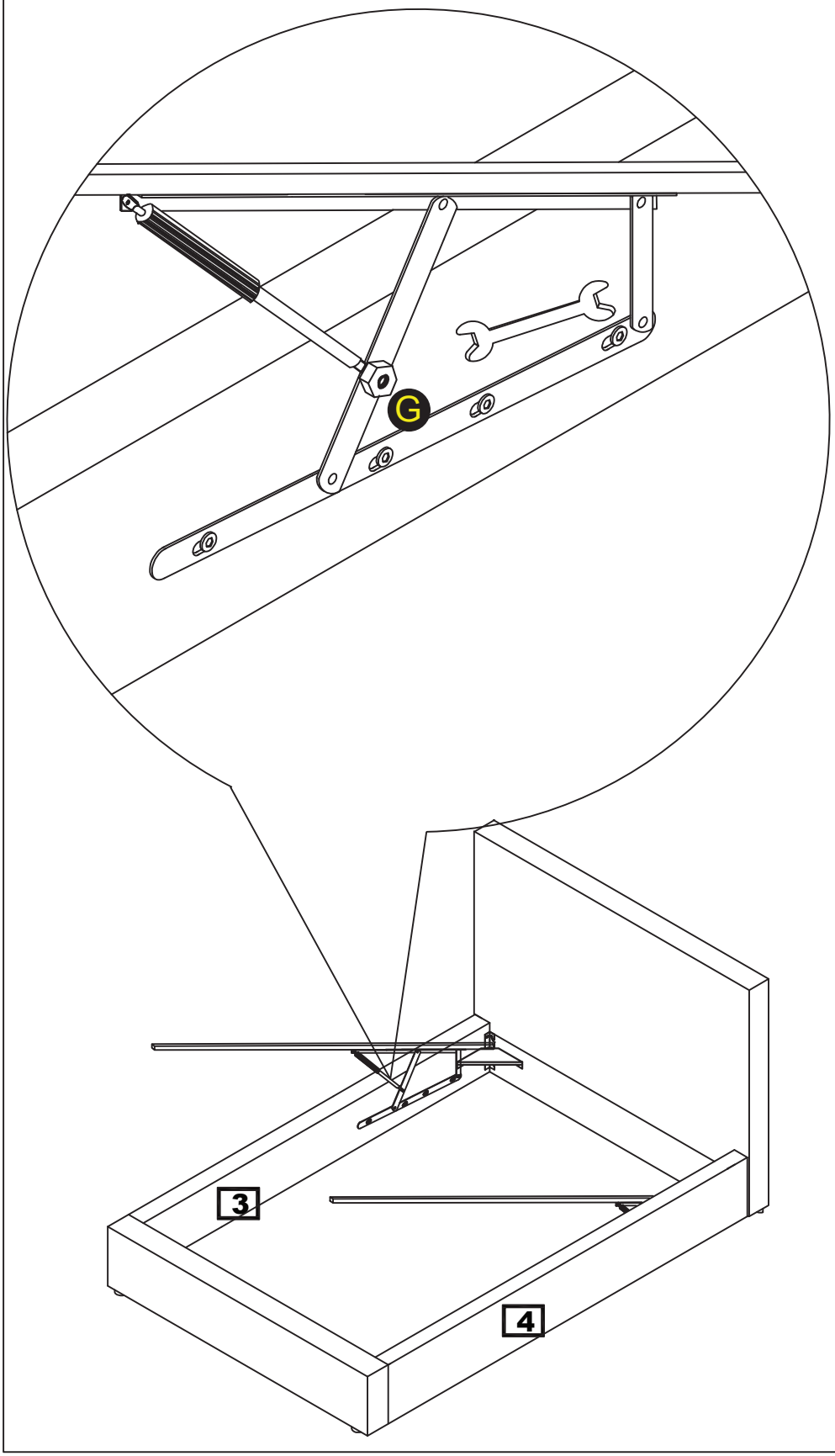

Parts Required

- 3 Left side rail x 1
- 4 Right side rail x 1
- G Nuts x 2
- J Spanner

END LIFT OTTOMAN BED ASSEMBLY INSTRUCTIONS

Step 6

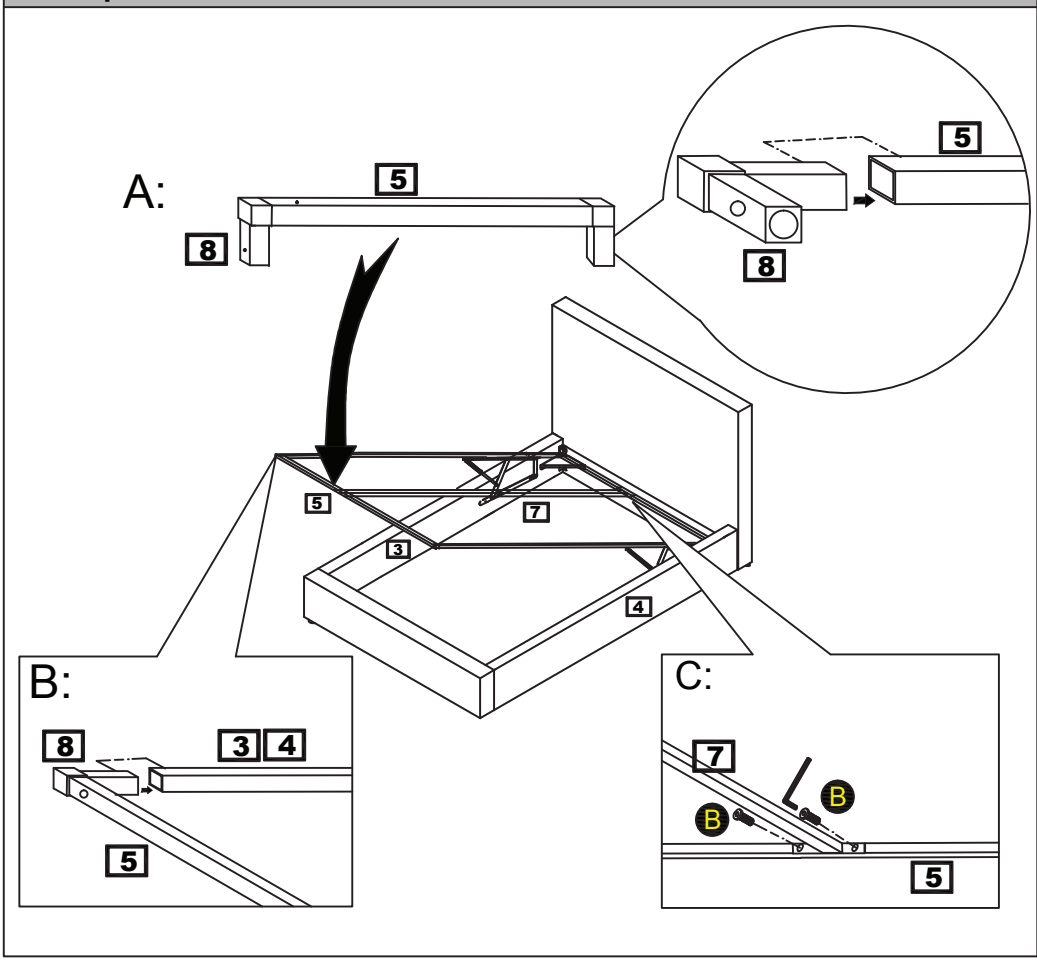

Parts Required

- 5 Front / Back frame rail x 2
- 7 Centre frame rail x 1
- 8 Plastic bracket sets x 4
- B 15mm M6 Bolt x 4
- H 4mm Allen key

Step 7

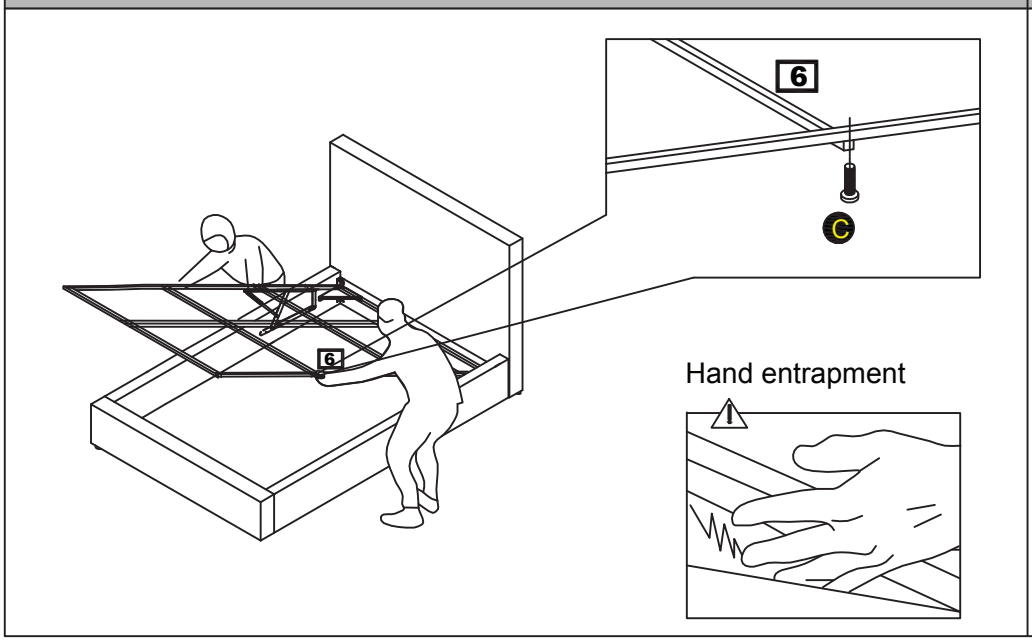

Parts Required

- 6 Horizontal frame rail x 2
- C 40mm M6 Bolt x 4
- H 4mm Allen key

END LIFT OTTOMAN BED ASSEMBLY INSTRUCTIONS

Step 8

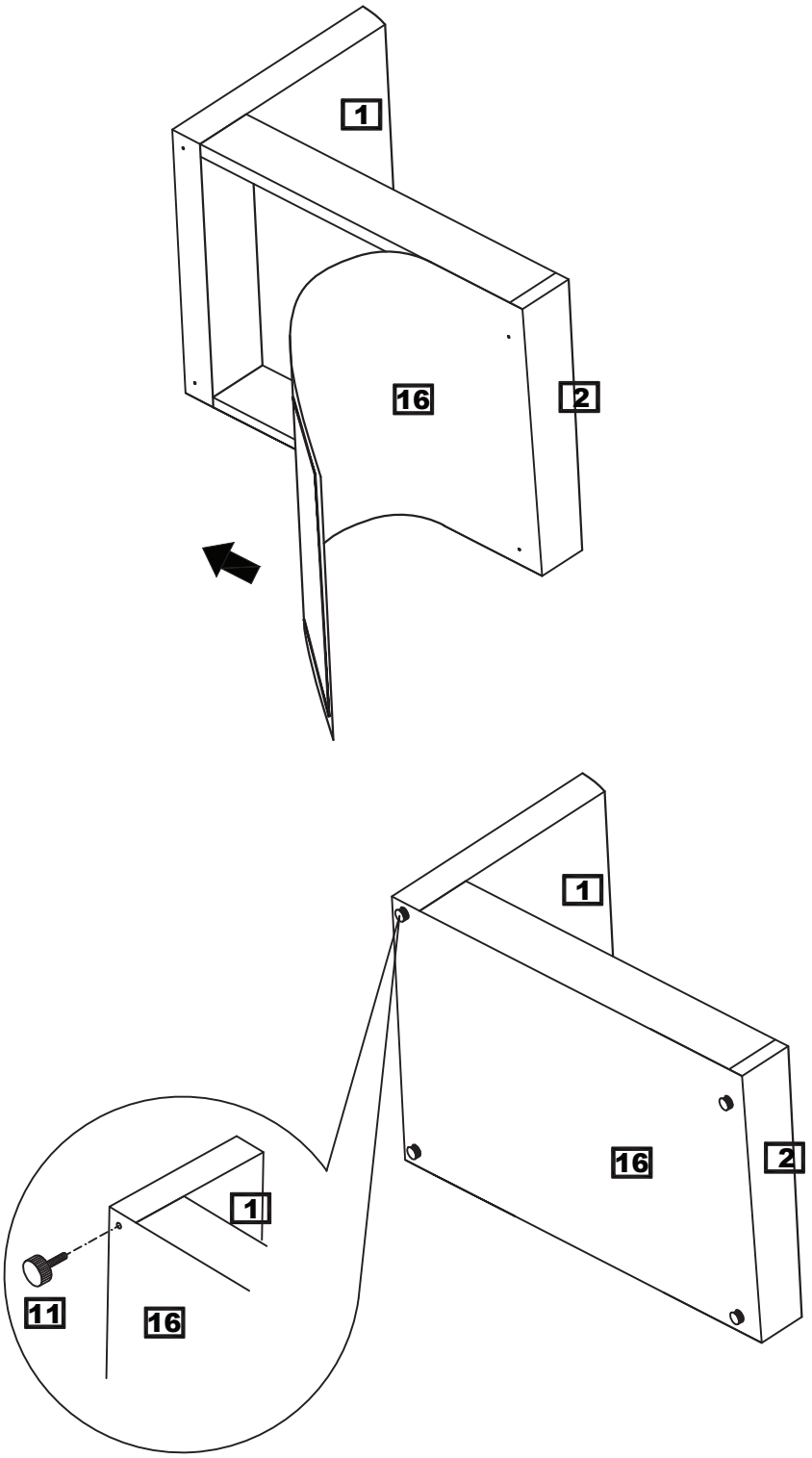

Parts Required

- 11 Adjustable legs x 4
- 16 Woven fabric x 1

END LIFT OTTOMAN BED ASSEMBLY INSTRUCTIONS

Step 9

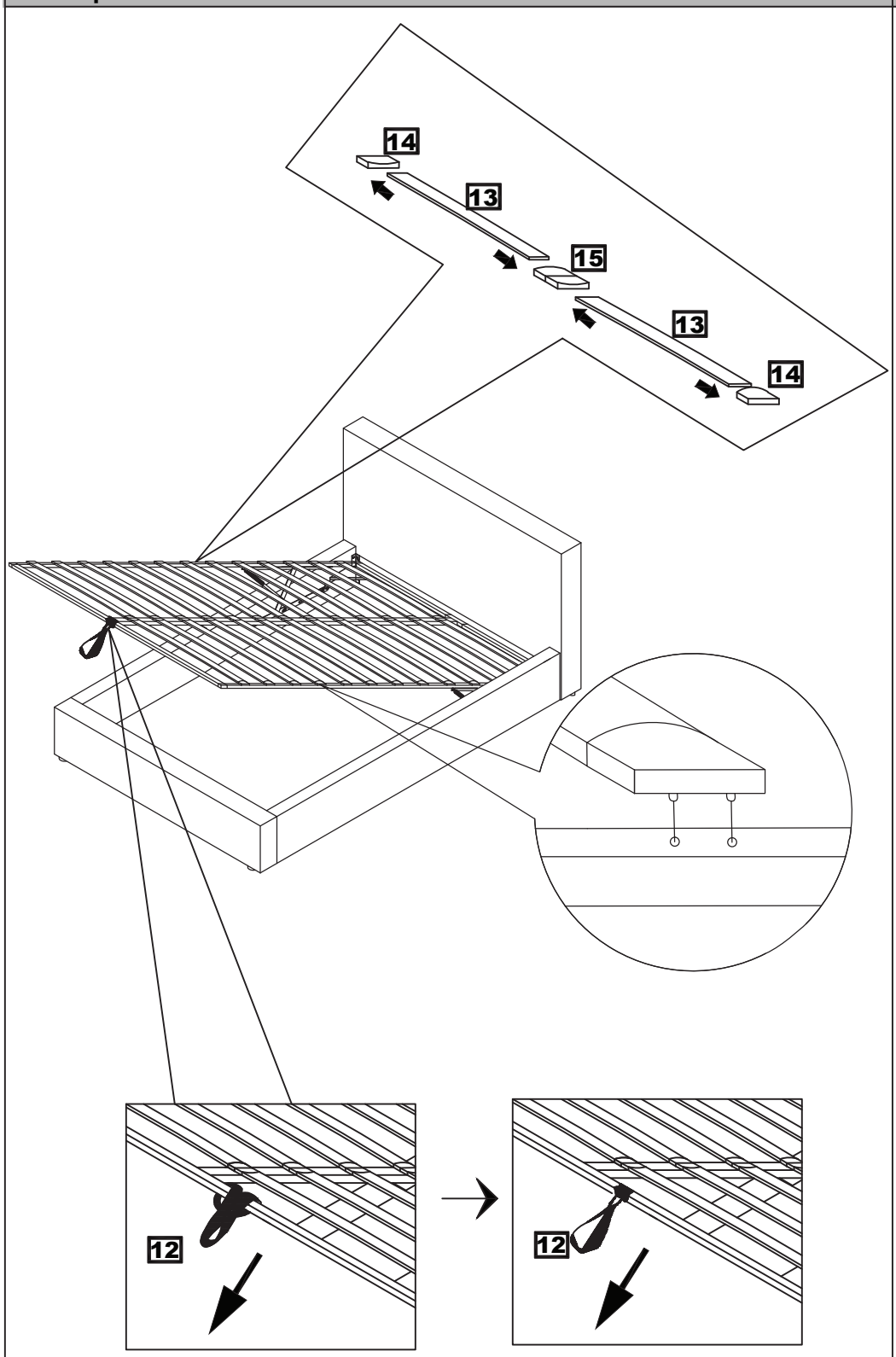

Parts Required

- 12 Belt x 1
- 13 Bent slats x 26/30
- 14 Plastic slat caps x 26/30
- 15 Centre slat caps x 13/15

END LIFT OTTOMAN BED ASSEMBLY INSTRUCTIONS

Complete Assembly

Your bed frame is now completely assembled but the ottoman will not operate correctly unless a mattress is placed on the slat frame and will not stay shut unless the mattress remains in position. To position the mattress on the slat frame, simply place the mattress on top of the slat frame whilst it is in the up (open) position.

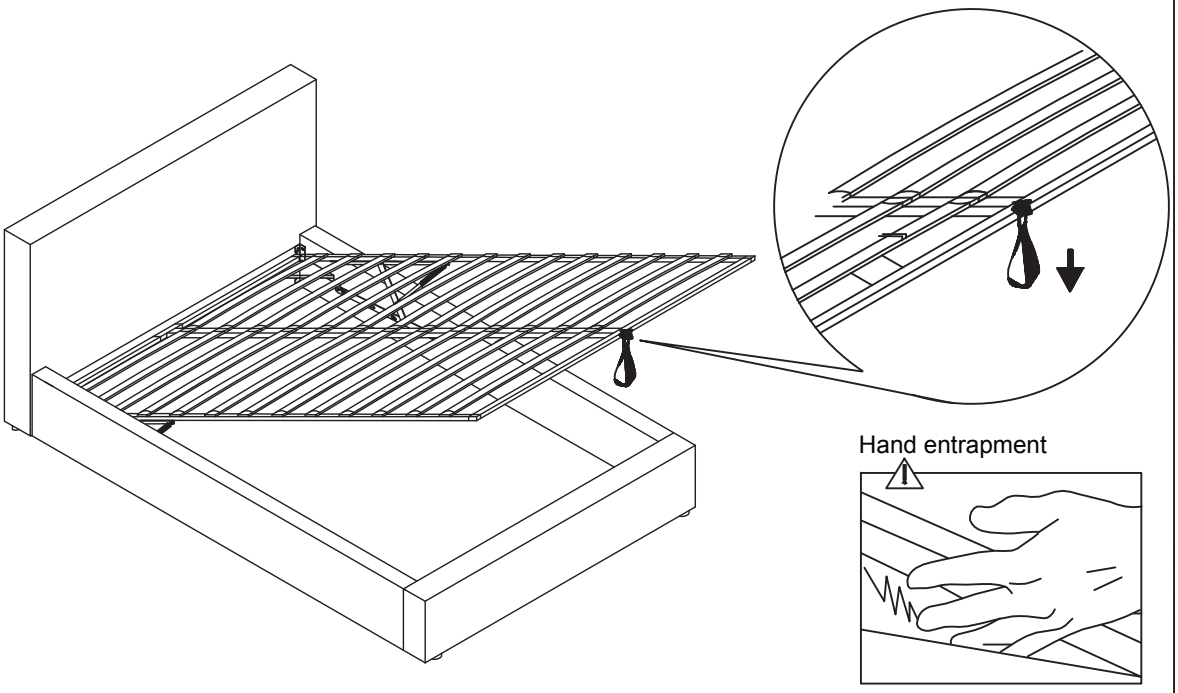

Lift with the strap (12) and close as per guidance page 7. The strap should always be accessible. Take care not to lean over the bed when lifting, if the mattress is thin and light, the frame may rise quickly. The speed of closing will also depend on the weight of the mattress so always keep fingers well clear of the metal frame.

PLEASE NOTE - It takes a lot of force to make the initial movement of the ottoman - **THIS IS A DESIGN FEATURE OF THE PRODUCT SO THAT IT DOES NOT FALL SHUT** - and the nearer to being closed the ottoman is, the easier it is to move. When the ottoman is almost shut, it will close completely under its own weight.

Tip for difficulty with compression:
If you are experiencing difficulty with the initial compression try fittingone piston at a time (following the Assembly Instructions) then pressdown on the side of the frame with the piston fitted - this acts like a biglever (The weight of the mattress can be used to supplement the loadexerted). Effectively you are doubling the amount of force applied,because you have halved the resistance offered by the pistons. It cantake slightly more effort than you might feel comfortable applying to thebed frame at first.

END LIFT OTTOMAN BED ASSEMBLY INSTRUCTIONS

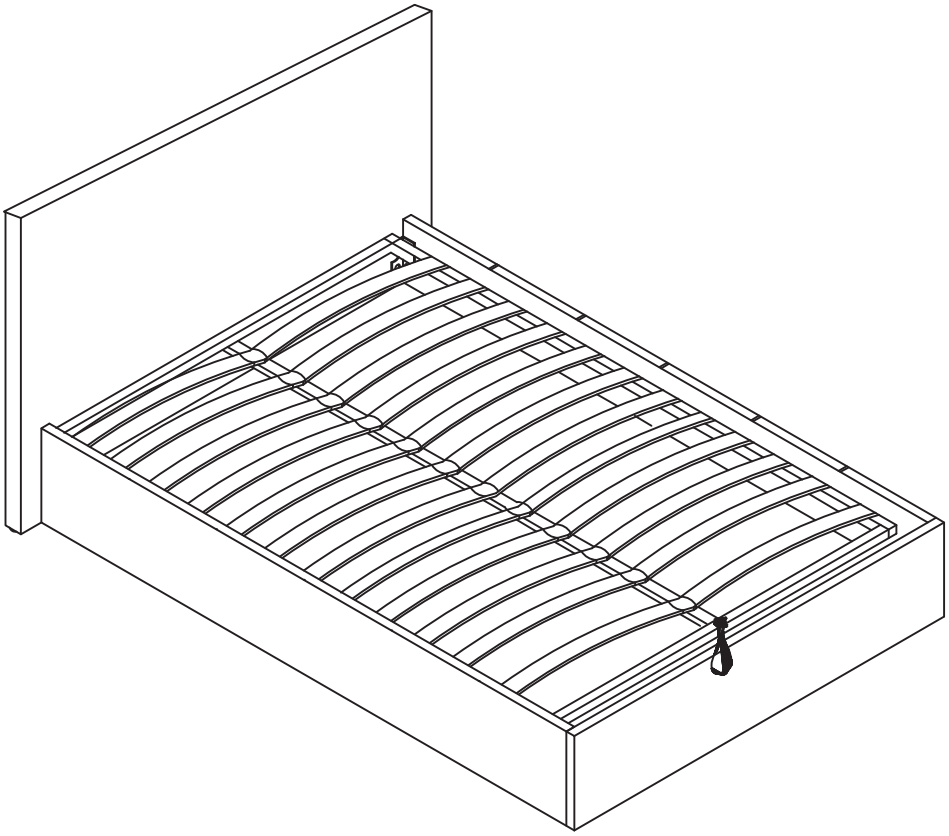

Periodically check to ensure that the components are in their proper position, free from damage. Also, make sure the connectors are tight and secure.

Keep instructions for future reference

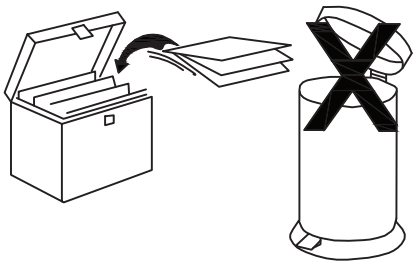

Supplied by:
GFW The Furniture Warehouse
Waterside Distribution Centre
Waterside Business Park
Johnson Road
Eccleshill
Lancashire
BB33RT
www.gfwlimited.co.uk

Represented by:
Authorised Rep Compliance Ltd
71 Lower Baggot Street
Dublin
D02 P593
Ireland
www.arccompliance.com