BAILEY - 3 + 2 DRAWER CHEST ASSEMBLY INSTRUCTION

Thank you for purchasing the **3 + 2 DRAWER CHEST.**
Please read the instructions carefully to ensure safe operation of the product.

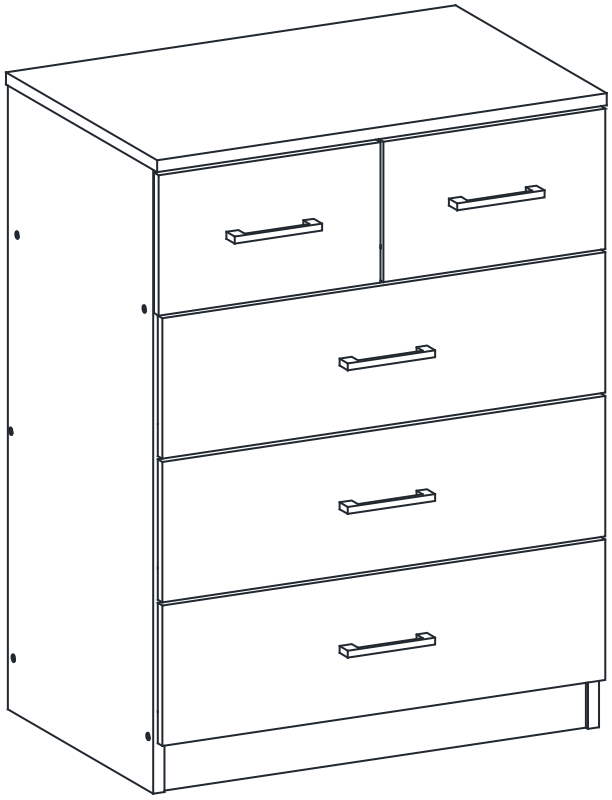

Size: (W)600mm x (D)398mm x (H)711mm

PLEASE READ this sheet prior to assembly to familiarise yourself with the various stages of construction.

Carefully open the pack supplied and check the contents against the parts and fittings check list. Do not destroy any of the packaging until you are certain that you have all the necessary parts for the assembly.

CAUTION: There are small components used in the construction of this unit. These loose items should be kept away from young children whilst assembling your unit to avoid the danger of choking hazards.

Tools Required

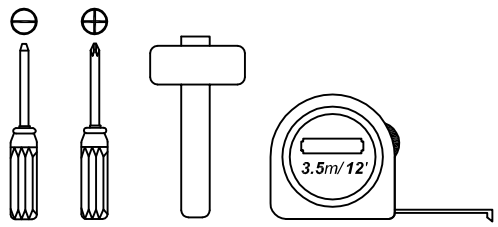

Person Required

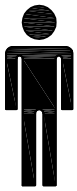

x 2

Approximate Assembly Time

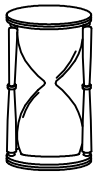

1 1/2 **Hour**

IMPORTANT - READ CAREFULLY - RETAIN THESE INSTRUCTIONS FOR FUTURE REFERENCE.

INFORMATION

- This product is intended for a maximum weight of **40kgs** and drawer load capacity **5kg** each. Do not exceed this weight.
- Due to the size of this product we recommend that is assembled in the room intended for use.
- When you are ready to start, make sure that you have the right tools, plenty of space and a clean, dry area for assembly
- Unwrap all packaging materials and place the components on top of the carton box or not on a clean floor to prevent it from scratching.
- Check the pack and make sure you have all the parts listed.
- Ensure that this product is fully assembled as illustrated before use.
- Check all screws or bolts are tightened and inspect regularly.
- This product should only be used on firm, level ground.
- Keep small parts out of reach of children.
- Make sure the legs remain in contact with the ground.
- Tools not included.

WARNINGS

- DO NOT use power tools to construct this product.
- DO NOT tighten screw until fully assembled.
- DO NOT over tighten screw or bolts.
- DO NOT use this product if parts are missing, damage or worn.
- DO NOT stand or sit on this product.
- We recommend the use of the wall safety bracket provided for safety reasons. N.B. Wall fixings suitable for a solid wall are included although the wall plug provided may not be suitable for other type of walls such as hollow walls. Fixings suitable for your wall type must be obtained separately..
  If in doubt please consult a qualified trade person. **Warning:** Always ensure the area to be drilled is free from hidden electrical wires, water and gas pipes.

CARE INFORMATION

- Never use scourers, abrasives or chemical cleaners.
- To clean wipe with a sponge and soapy water. Do not use solvent based cleaners or detergents as they can bleach or damage the product.

Please check the pack contents before assembling the product. If any components are missing, please contact your retailer. The fittings pack contains small items that should be kept away from small children.

Parts

CODE	PART NAME	QTY
A	Side Panel (L) (12 x 383 x 699mm)	1
B	Side Panel (R) (12 x 383 x 699mm)	1
C	Top Panel (12 x 398 x 600mm)	1
D	Bottom Panel (12 x 156 x 381mm)	1
E	Support Panel (12 x 60 x 574mm)	1
F	Support Panel (12 x 60 x 574mm)	1
G	Bottom Support Panel (12 x 60 x 574mm	1
H	Bottom Support Panel (12 x 60 x 574mm)	1
I	Leg Panel (12 x 60 x 574mm)	2
J	Back Support Panel(12 x 60 x 574mm)	1

CODE	PART NAME	QTY
K	Drawer Front Panel (12 x 156 x 295mm)	1
L	Drawer Front Panel (12 x 156 x 295mm)	1
M	Drawer Front Panel (12 x 156 x 594mm)	3
N	Drawer Side (L) (12 x 125 x 340mm)	5
O	Drawer Side (R) (12 x 125 x 340mm)	5
P	Drawer Back (12 x 125 x 247mm)	2
Q	Drawer Back(12 x 125 x 540mm)	3
R	Drawer Support (12 x 60 x 328mm)	3
Y	Back Panel (2.5 x 298 x 646mm)	1
Y1	Back Panel (2.5 x 298 x 646mm)	1
Z	Drawer Bottom (2.5 x 337 x 549mm)	3
Z1	Drawer Bottom (2.5 x 256 x 376mm)	2

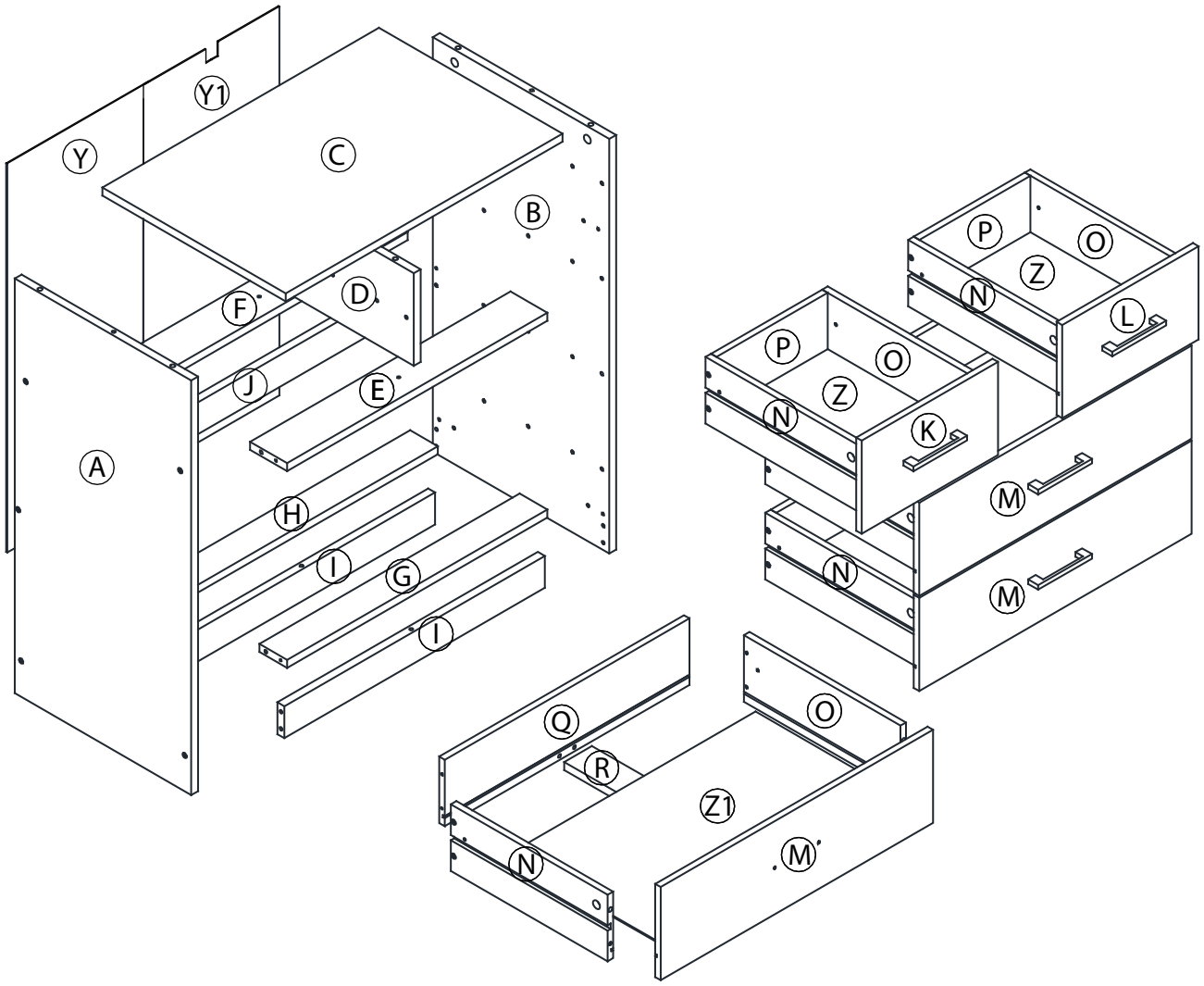

Fixings (to scale)

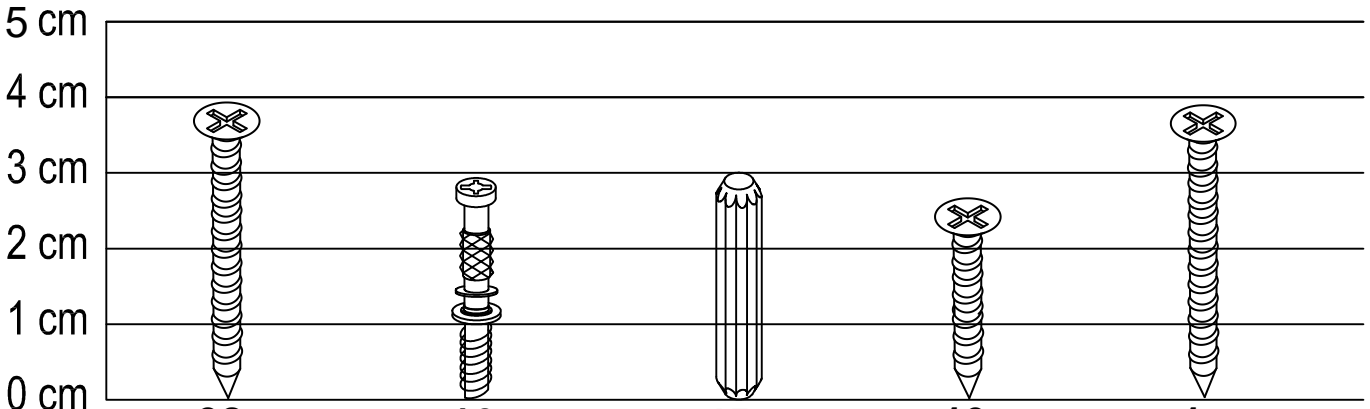

32x
M4.7 x 38mm
a
CSK Screw

16x
M5 x 29mm
b
Minifix Bolt

45x
D6 x 30mm
c
Wooden Dowel

10x
M4 x 25mm
d
CSK Screw

1x
M4 x 38mm
e
CSK Screw

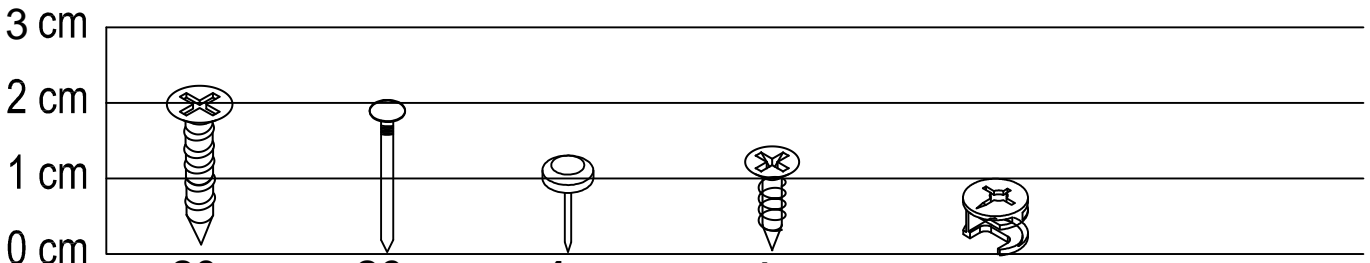

20x
M3.1 x 20mm
f
CSK Screw

26x
g
Nail Pin

4x
h
Nail Leg

1x
M3.5 x 12mm
i
Csk Screw

16x
D9 x 15mm
j
Minifix Cam

Fixings (not to scale)

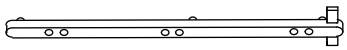

10x
(300 mm)
k
Pvc Drawer Slide



10x
l
Drawer Stopper

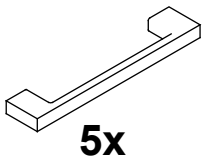

5x
m
Pvc Handle



10x
(D-19mm)
n
Round Sticker

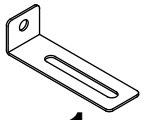

1x
o
L-mounting
Bracket



1x
p
Wall Plug

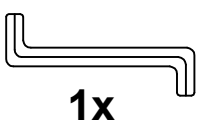

1x
M4
q
Allen Key

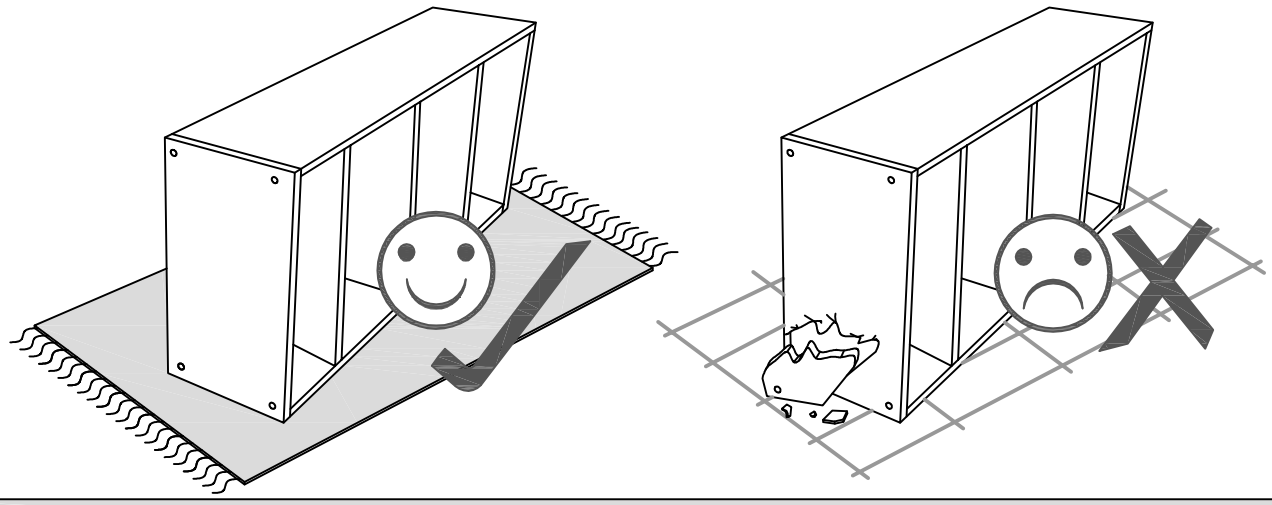

Layout Parts on Soft Surface

STEP 1

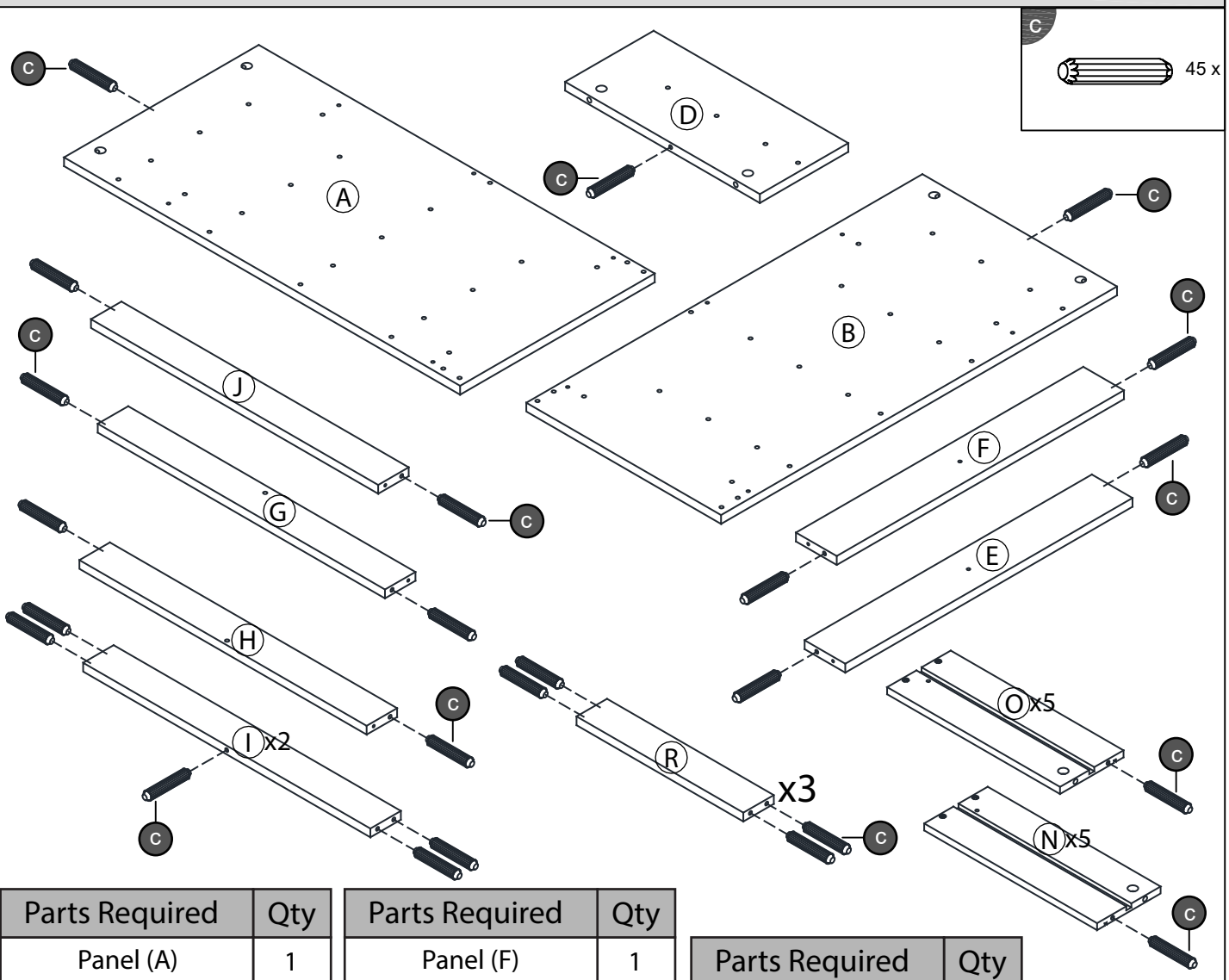

Parts Required	Qty
Panel (A)	1
Panel (B)	1
Panel (D)	1
Panel (E)	1

Parts Required	Qty
Panel (F)	1
Panel (G)	1
Panel (H)	1
Panel (I)	2

Parts Required	Qty
Panel (N)	5
Panel (O)	5
Panel (R)	3

STEP 2

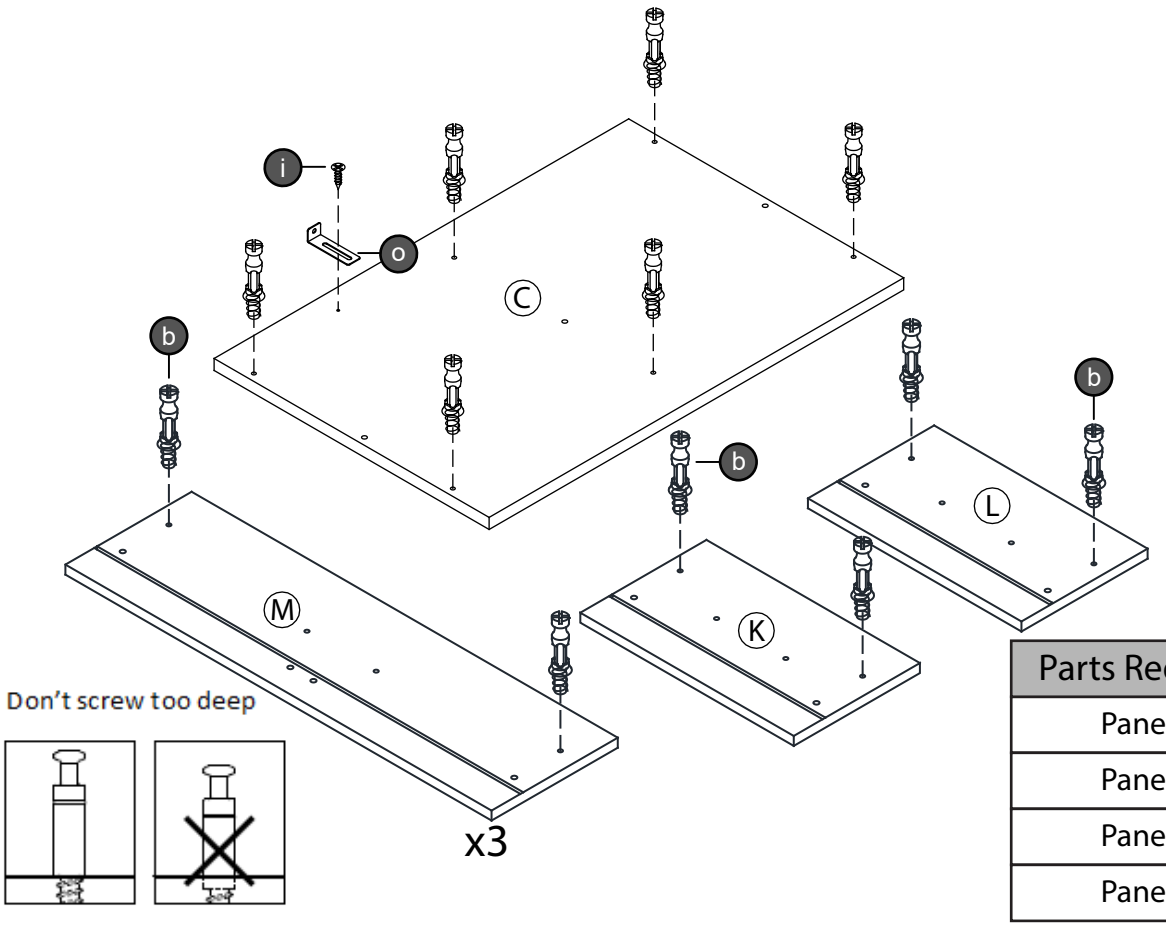

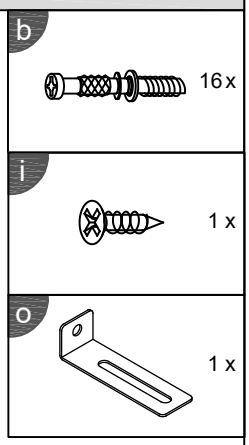

Parts Required	Qty
Panel (C)	1
Panel (K)	1
Panel (L)	1
Panel (M)	3

STEP 3

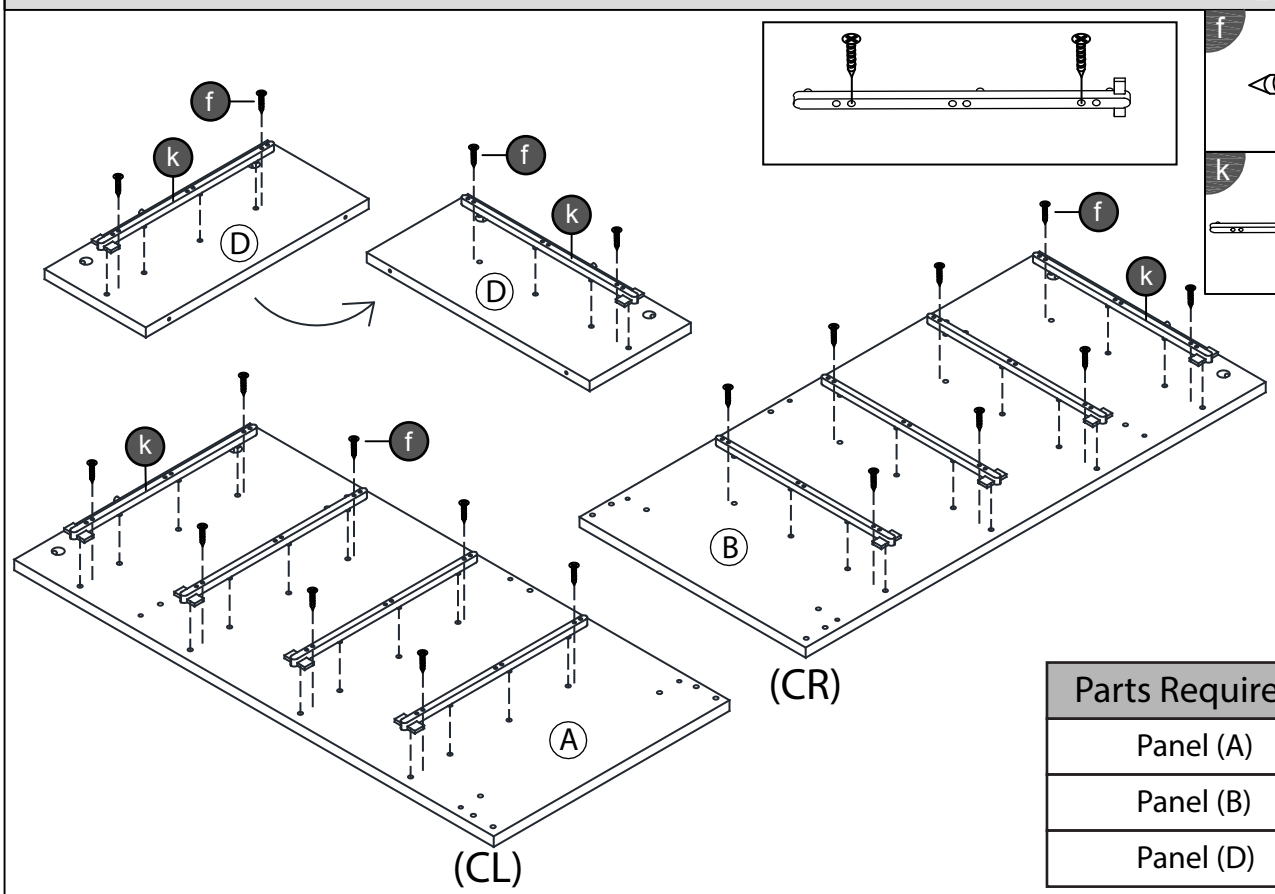

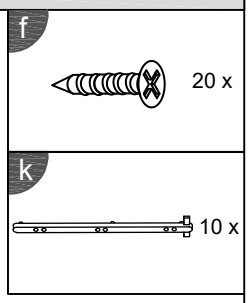

Parts Required	Qty
Panel (A)	1
Panel (B)	1
Panel (D)	1

STEP 4

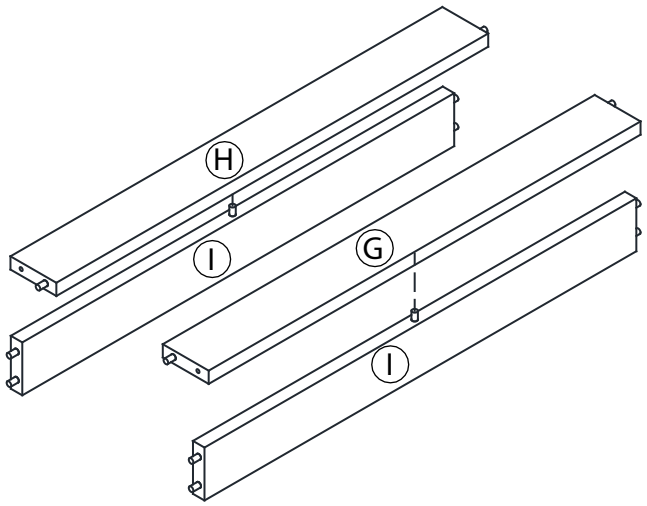

Parts Required	Qty
Panel (G)	1
Panel (H)	1
Panel (I)	2

STEP 5

a



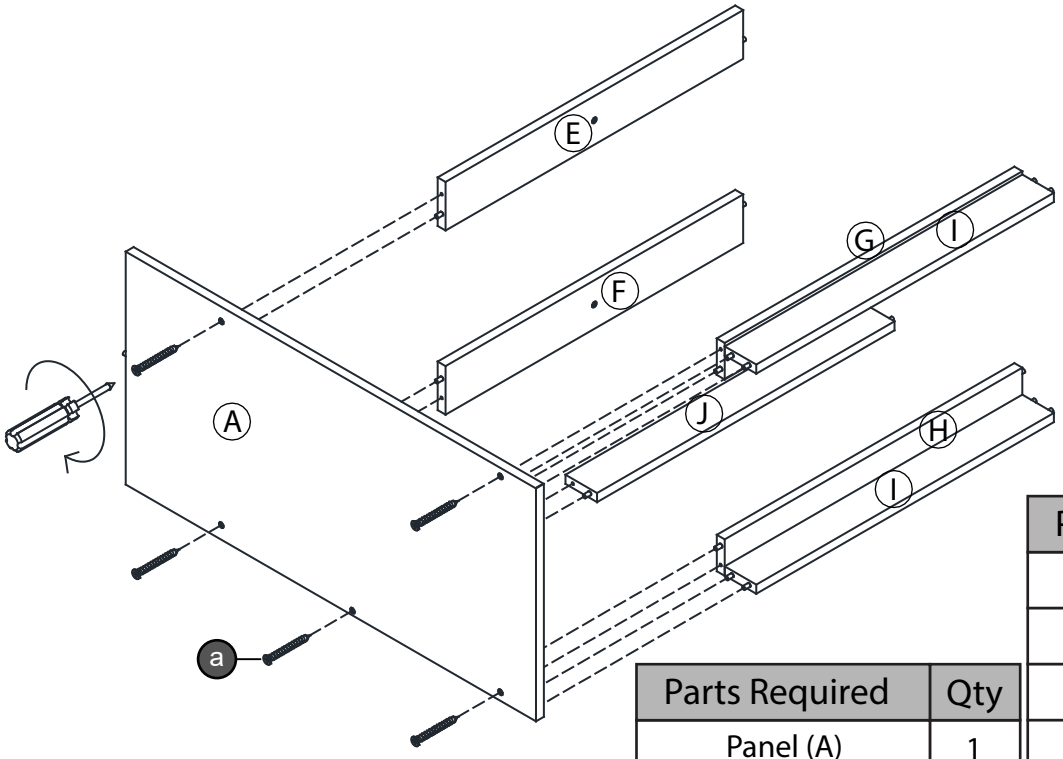

Parts Required	Qty
Panel (A)	1
Panel (E)	1

Parts Required	Qty
Panel (F)	1
Panel (G)	1
Panel (H)	1
Panel (I)	2
Panel (J)	1

STEP 6

a 5 x

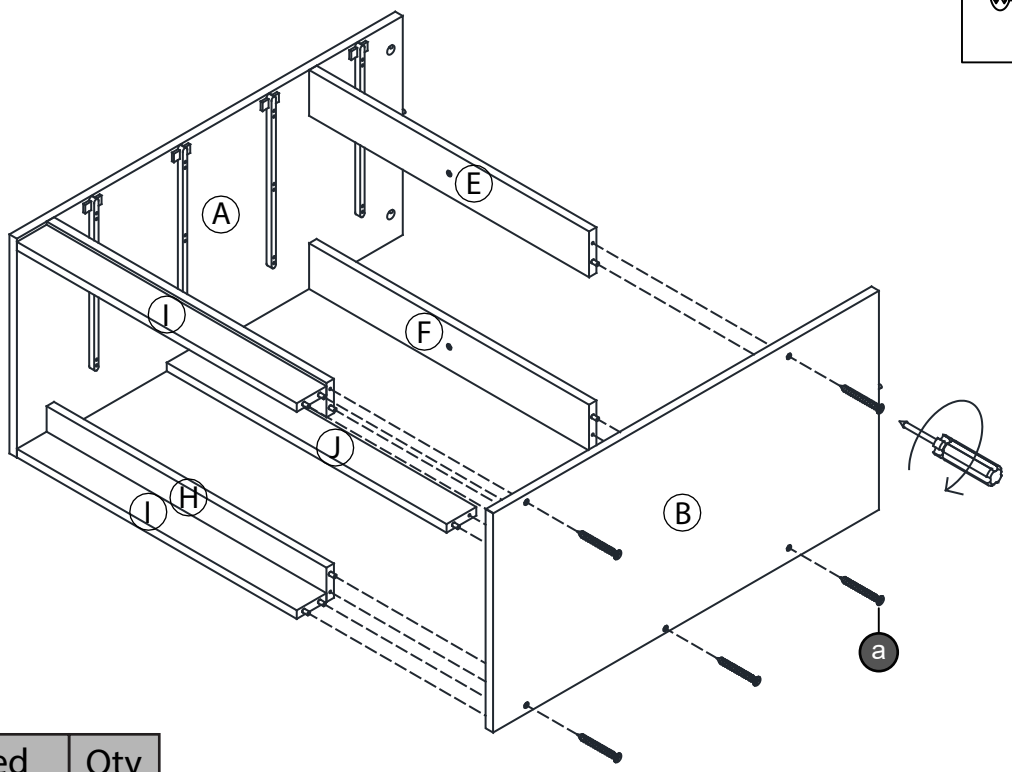

Parts Required	Qty
Panel (B)	1

STEP 7

a 2 x

h 4 x

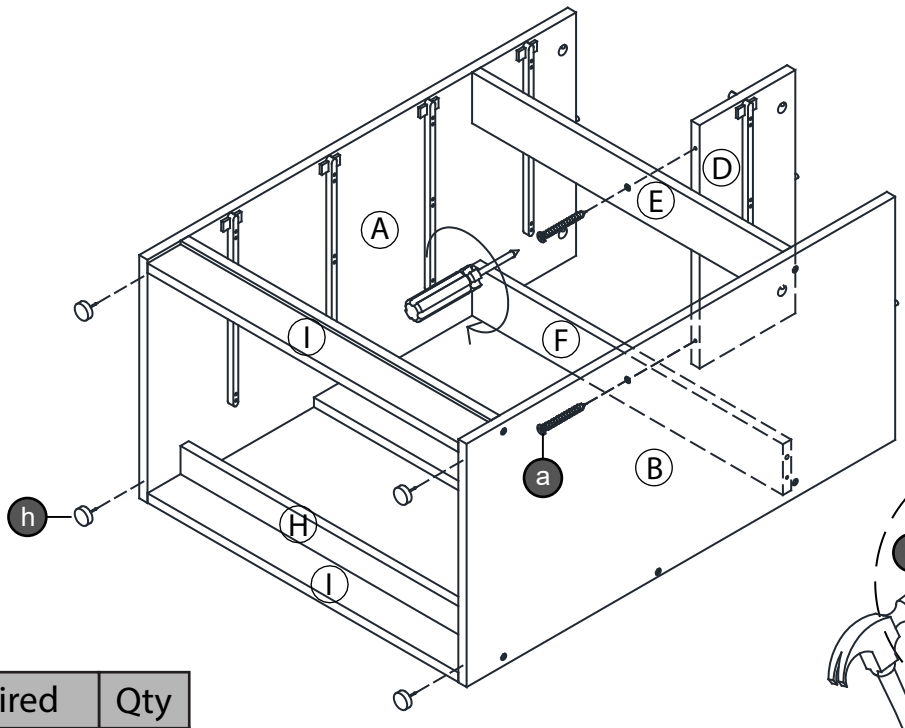

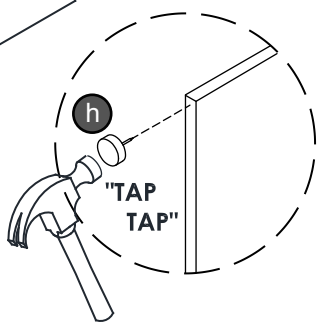

Parts Required	Qty
Panel (D)	1

STEP 8

j

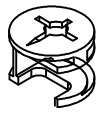

6 x

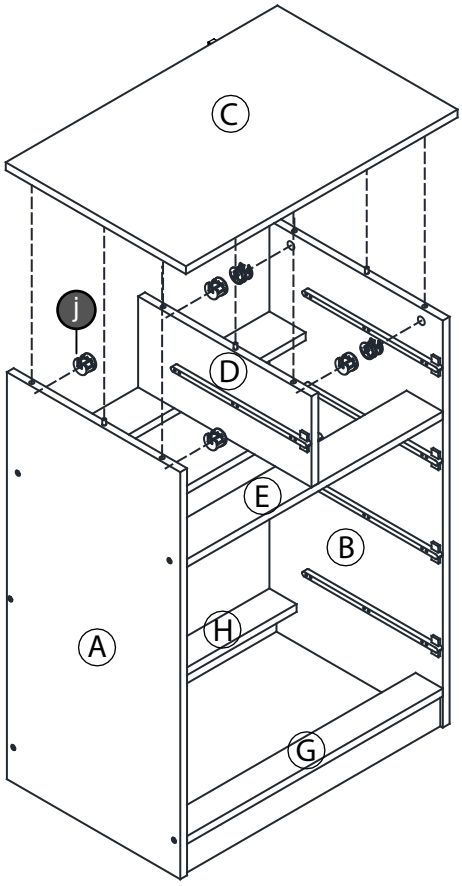

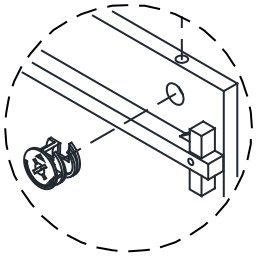

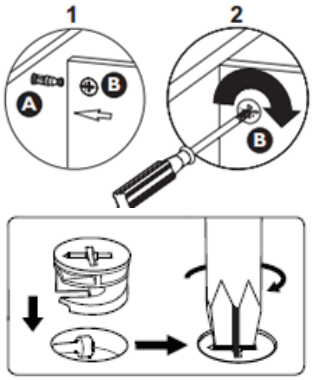

Parts Required	Qty
Panel (C)	1

STEP 9

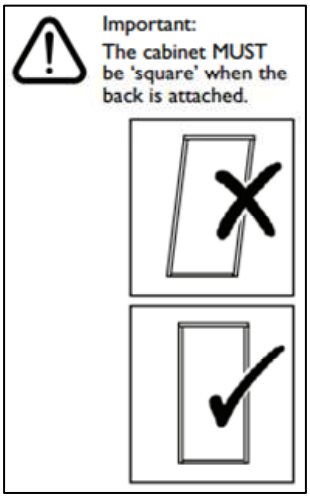

g

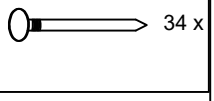

34 x

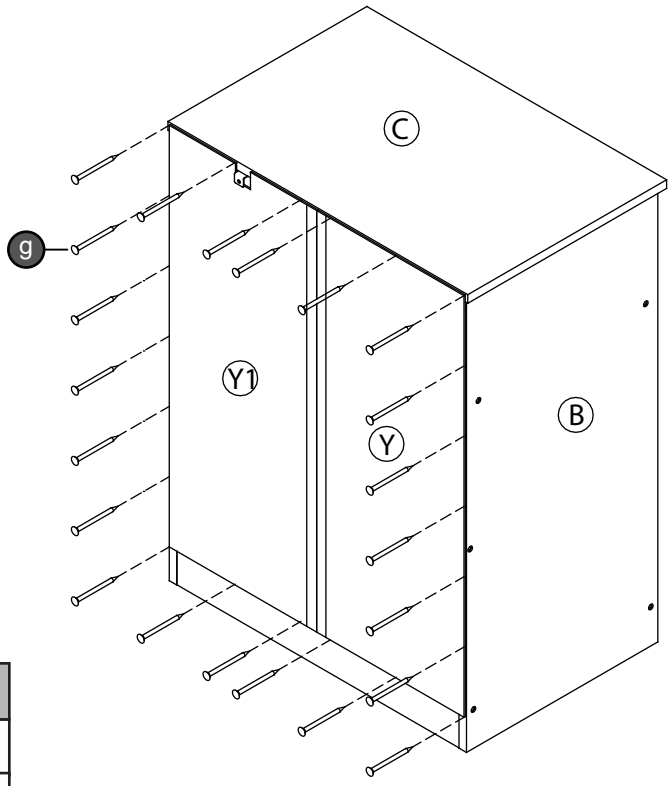

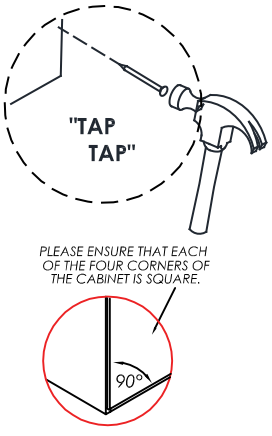

Parts Required	Qty
Panel (Y)	1
Panel (Y1)	1

STEP 10

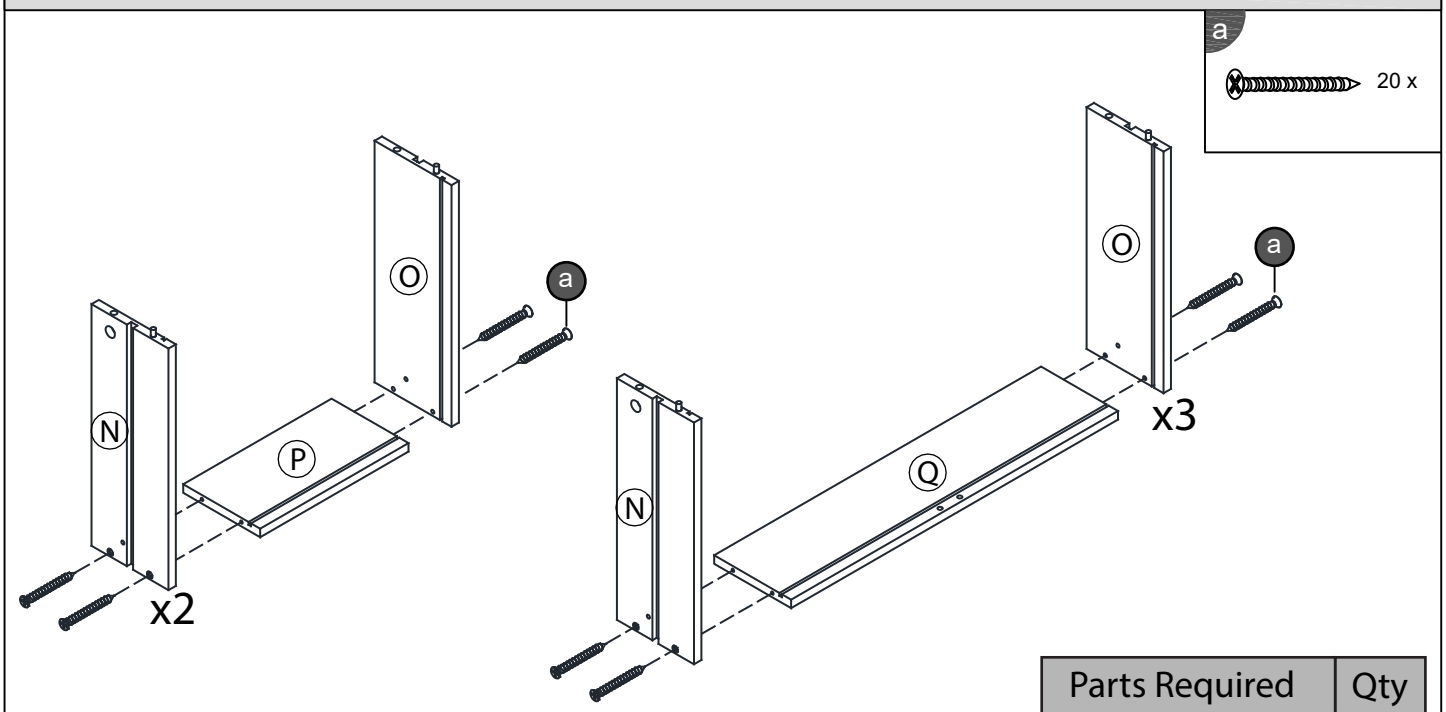

Parts Required	Qty
Panel (N)	5
Panel (O)	5
Panel (P)	2
Panel (Q)	3

STEP 11

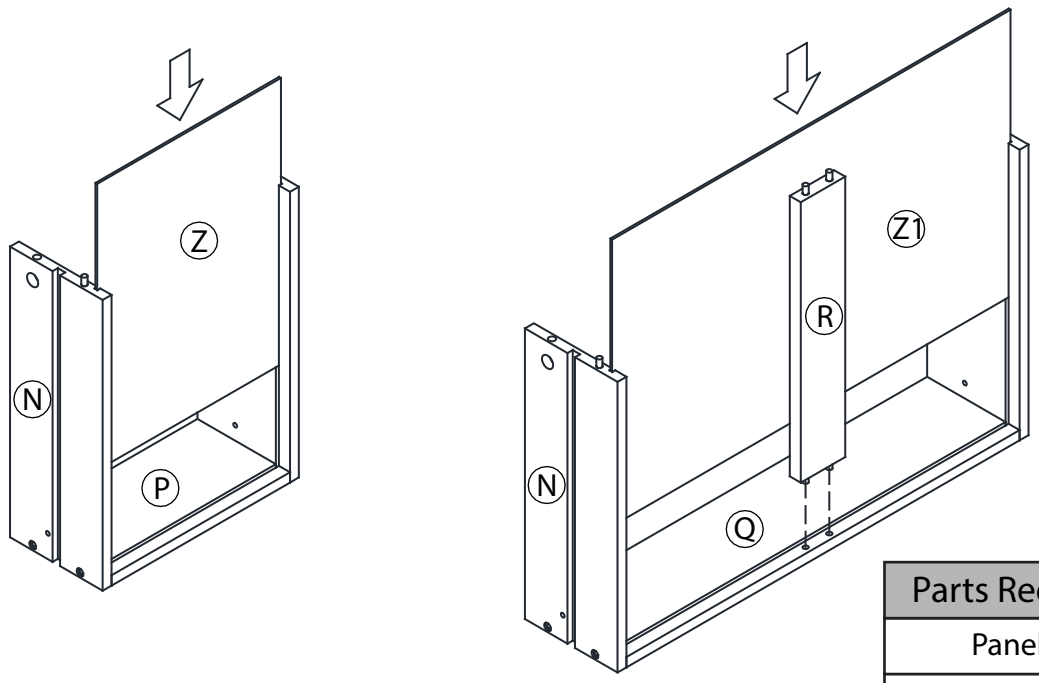

Parts Required	Qty
Panel (R)	3
Panel (Z)	2
Panel (Z1)	3

STEP 12

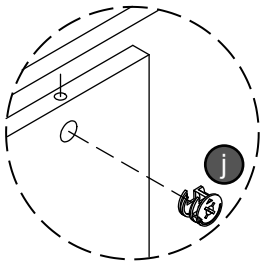

j

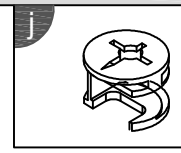

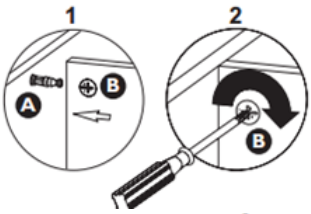

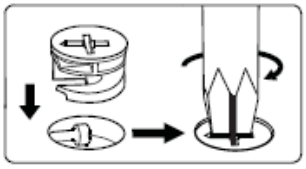

Parts Required	Qty
Panel (K)	5
Panel (L)	5
Panel (M)	5

STEP 13

d



m

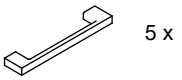

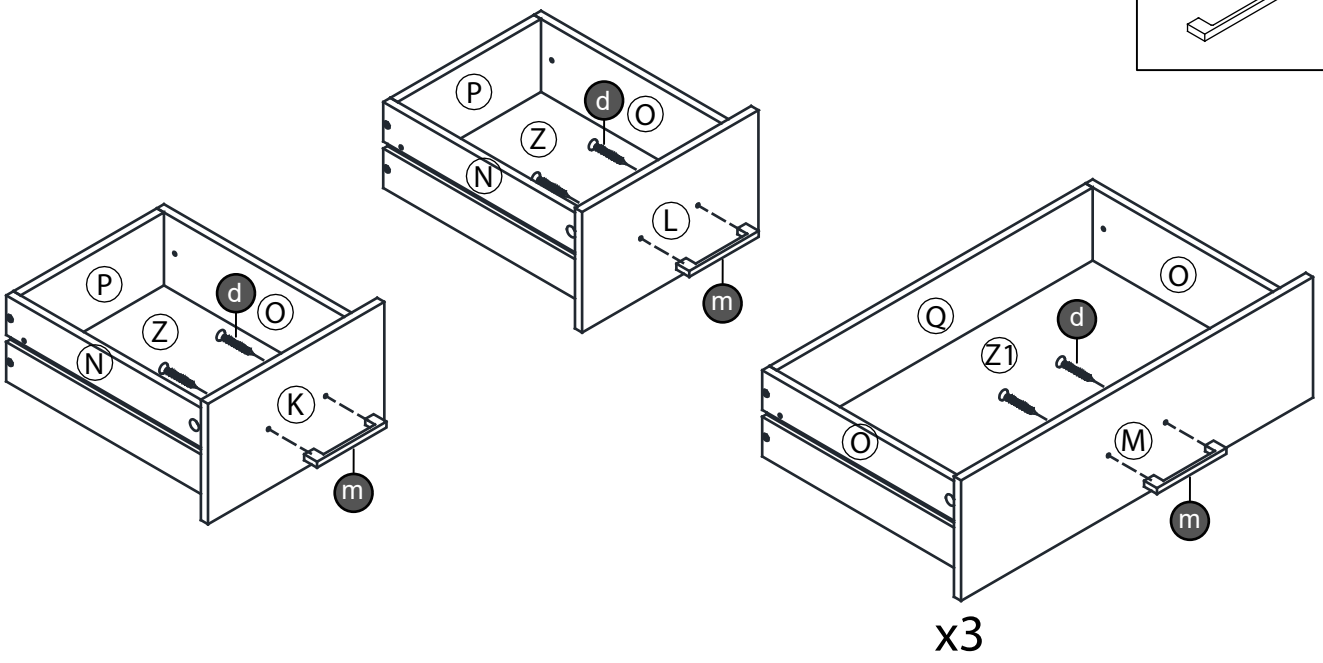

STEP 14

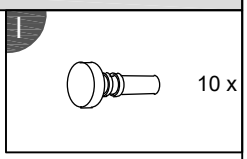

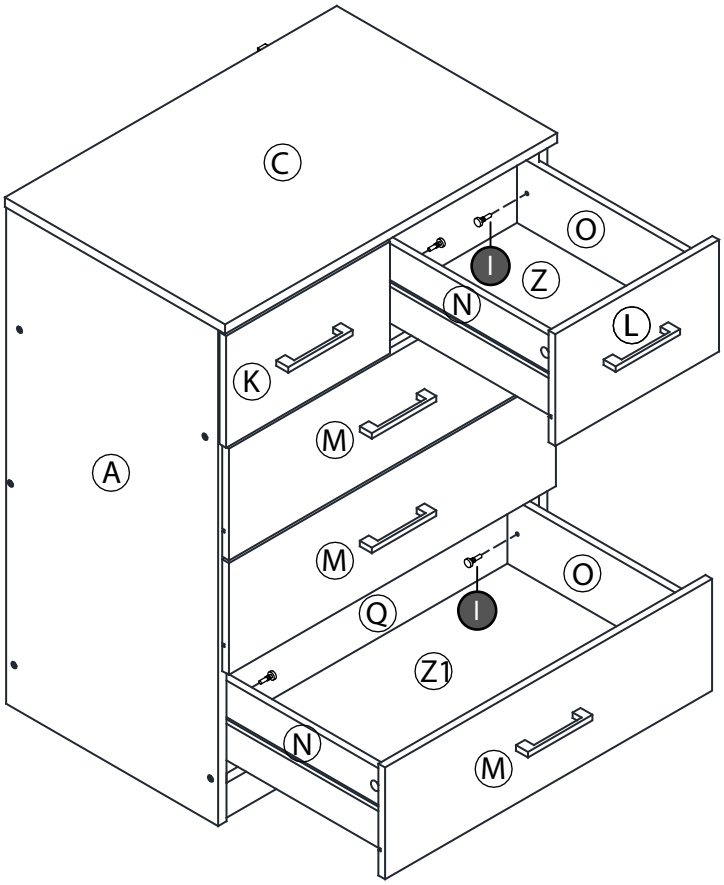

STEP 15

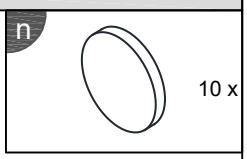

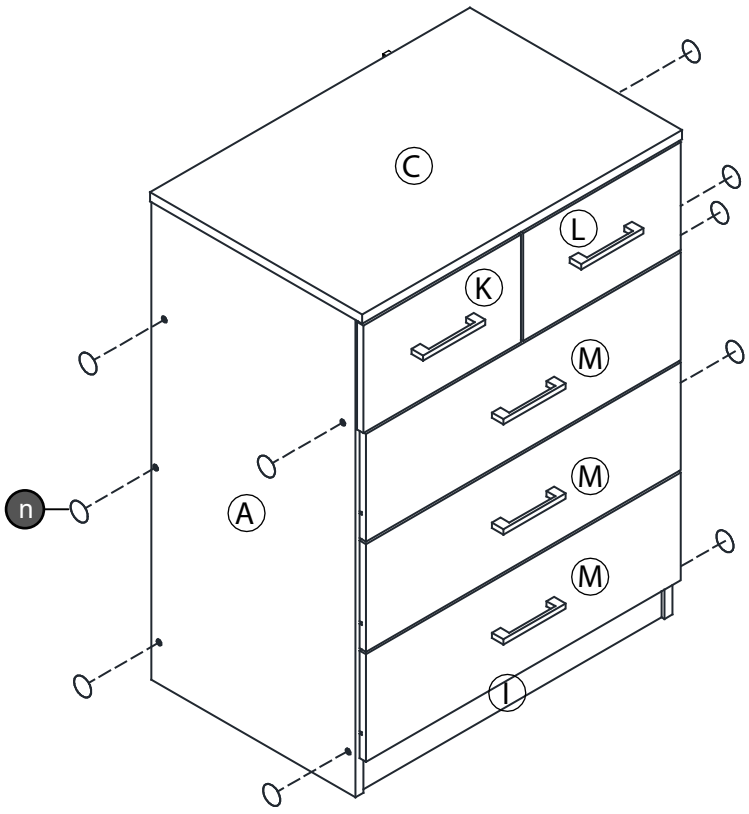

FITTING OF L MOUNTING BRACKET

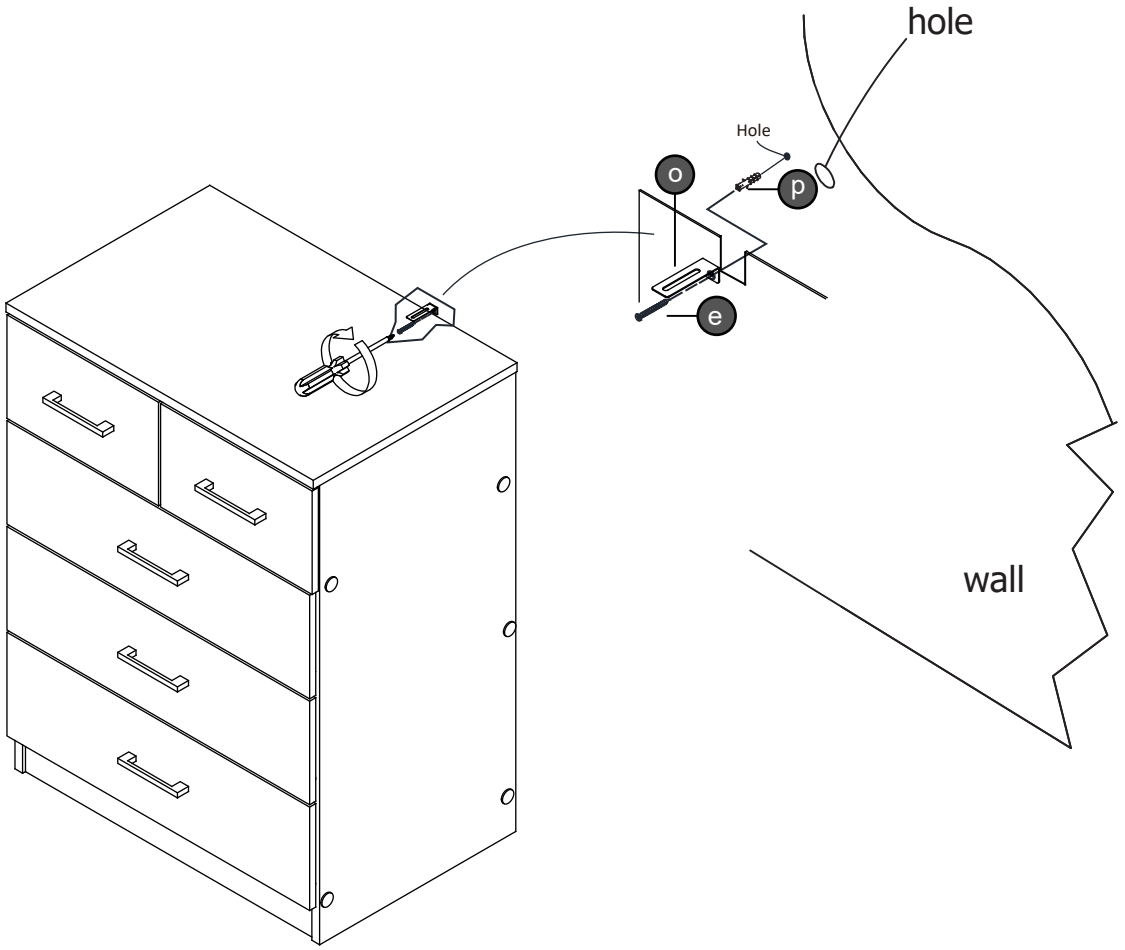

NOTE : The wall fixing plug supplied with this product is suitable for solid and brick walls .

For hollow and stud type walls fixing devices suitable for those type of walls must be obtained separately.

Please ensure the fixing is safe and secure before use and that the area to be drilled is free from hidden wires ,water & gas pipes.

HARDWARE LIST

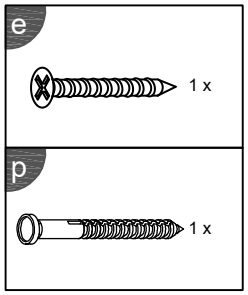

Complete Assembly

Your **BAILEY 3 + 2 DRAWER CHEST** is now completely assembled

Periodically check to ensure that the components are in their proper position, free from damage. Also, make sure the connectors are tight and secure.

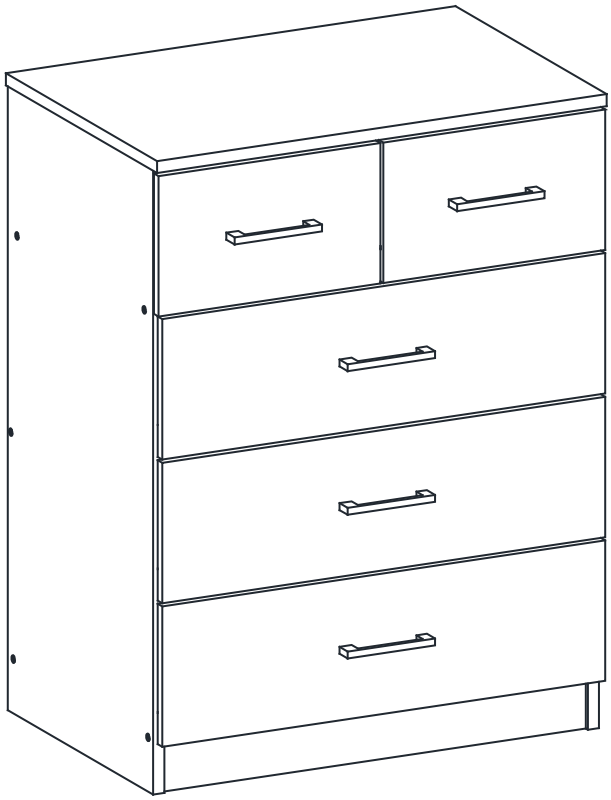

Represented by:
Authorised Rep Compliance Ltd
71 Lower Baggot Street
Dublin
D02 P593
Ireland
www.arccompliance.com

Keep instructions for future reference

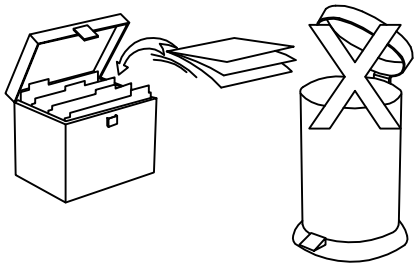

Supplied By
GFW The Furniture Warehouse
Waterside Distribution Centre
Waterside Business Park
Johnson Road
Lancashire
BB3 3RT
www.gfwlimited.co.uk