ASKO
Inspired by Scandinavia

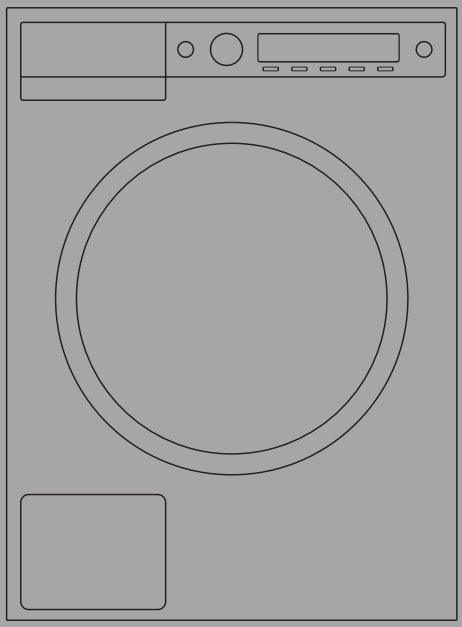

USER MANUAL

Washing machine

EN

WM76S

W1094W.UK

Carefully read the instructions for use before using the washing machine.

Contents

Introduction 3
Safety precautions 4
Before using the appliance for the first time 10
Packaging 10
Transport protection 10
Cleaning 11
Opening the Door 11
Installation and connection 12
Selecting the room 12
Positioning the washing machine 12
Built-in 16
Moving the washing machine and transport after installation 17
Connection to water supply 18
Installing the drain hose 19
Connecting to the power mains 20
ASKO Laundry Care - Hidden helpers 21
Washing machine description 22
Detergent compartment 22
Initial settings before use 23
Appliance connection with the ConnectLife application 25
Tips before washing 28
Laundry sorting 28
Clothing 28
Laundry symbols 29
Laundry types 30
Reducing allergic reactions 30
Saving time and energy 30
Economy and efficiency 30
Detergents 31
Dosing accessories 31
Stains 31
Dyeing fabrics 31
Washing process, step by step (1 – 8) 33
STEP 1: Sort the laundry 33
STEP 2: Turn on the main switch. 33
STEP 3: Open the washing machine door and insert the laundry 33
STEP 4: Add the detergent and the softener. 33
STEP 5: Choose the program. 35
STEP 6: Choosing the program settings 37
STEP 7: Start the wash 41
STEP 8: End of program 43
Appliance settings 44
System settings 44
Cleaning and maintenance 48
Cleaning the dispenser tray 48
Cleaning the filter 49
Cleaning the appliance exterior 50
Cleaning the washing machine interior against odours 50
If you are using hard water 50
Errors: what to do? 51
Manual opening of washing machine door .. 54
Failure display 55
Service 59
Before calling a service center 59
Technical information 61
PRODUCT INFORMATION SHEET according to EU-Regulation no. 2019/2014 61
Technical data 63
Typeface License Notice 63
Radio equipment type 64
Declaration of conformity 64
Table of consumption values 65
Table options 67
DISPOSAL 68

Dear Customer,

We thank you for purchasing this quality ASKO product.

We hope it meets all your expectations. Scandinavian design combines pure lines, everyday functionality, and high quality. These are the key characteristics of all our products, and the reason why they are highly appreciated across the globe.

We recommend that you read the user manual before using the washing machine for the first time. The user manual also includes information on how you can help protect the environment.

The following symbols are used throughout the manual and they have the following meanings:

INFORMATION!

Information, advice, tip, or recommendation

WARNING!

Warning – general danger

ELECTRIC SHOCK!

Warning – danger of electric shock

HOT SURFACE!

Warning – danger of hot surface

DANGER OF FIRE!

Warning – danger of fire

Original instructions

SAVE THESE INSTRUCTIONS FOR FUTURE REFERENCE!

General

Please read the instruction manual and save it for future reference.

- **Please, do not use the washing machine without reading and understanding these instructions or use first.**
- This appliance is not intended for use by persons (including children) with reduced physical, sensory or mental capabilities, or lack of experience and knowledge, unless they have been given supervision or instruction concerning use of the appliance by a person responsible for their safety.
- **Failure to observe the instructions for use** or inappropriate use of the washing machine may result in damage to the laundry or the appliance, or injury to the user. Keep the instruction manual handy, near the washing machine.
- Instructions for use are available on our website at www.asko.com.
- **This appliance is intended to be used in household and similar applications, such as:**
  - staff kitchen areas in shops, offices and other working environments;
  - farm houses;
  - by clients in hotels, motels and other residential type environments;
  - bed and breakfast type environments.
- **This appliance must not be used in:**
  - areas for communal use in blocks of flats or launderettes.
- Before using the machine, remove all transit bolts. See chapter *Before using the appliance for the first time/ Transport protection*.
- Emergency door opening tool is located on the back side of the dispenser.
- Maximum washing capacity in kg (for the Cotton program) is indicated on the rating plate (or in the chapter *STEP 5: Choose the program./Program chart*).

Child safety

⚠ WARNING!

Children of less than 3 years should be kept away unless continuously supervised.

Children should be supervised to ensure that they do not play with the appliance.

Keep the detergent and conditioner out of reach of children.

- Before closing the washing machine door and running the program, make sure there is nothing except laundry in the drum (e.g. if a child climbed into the washing machine drum and closed the door from the inside).
- **Activate the Lock (Lock).** See chapter *System settings*.
- **The washing machine is made in compliance with all relevant safety standards.**
- This appliance can be used by children aged from 8 years and above and persons with reduced physical, sensory or mental capabilities or lack of experience and knowledge if they have been given supervision or instruction concerning use of the appliance in a safe way and understand the hazards involved.
- Children shall not play with the appliance.
- Cleaning and user maintenance shall not be made by children without supervision.

Danger of hot surface

HOT SURFACE!

Warning – danger of hot surface

At higher washing temperatures, the door glass will heat up. Be careful to avoid burns. Make sure children do not play near the door glass.

Connection and installation safety

⚠ WARNING!

The washing machine may only be used with the supplied power cord.

⚠ ELECTRIC SHOCK!

To avoid danger, a **damaged power cord** may only be replaced by the manufacturer, a service technician, or an authorized person.

⚠ WARNING!

Do not connect the washing machine to power mains using an external switching device such as a programme timer, or connect it to power mains that is regularly switched on and off by the power supply provider.

- The appliance has to be connected to the water and power supply by a trained expert.
- Any repair and maintenance pertaining to safety or performance should be done by trained experts.
- **Do not install the washing machine in a room where the temperature can drop to below 5°C**, as washing machine parts may be damaged in case of water freezing.
- The ventilation openings in the base of washing machine must not be obstructed by a carpet.
- After installation, the washing machine should stand still for two hours before it is connected to the power mains.
- The washing machine may not be connected to the power mains using an extension cord.
- Do not connect the washing machine to an electrical outlet intended for an electric shaver or hair dryer.
- To connect the washing machine to water supply, make sure to use the supplied water supply hose and gaskets. Water pressure

has to be between 0.1 and 1 MPa (approximately 1–10 kp/cm^2, 1-10 bar, 10–100 N/cm^2).

- Always use a new water supply hose to connect the washing machine to water supply; do not reuse an old water supply hose.
- The end of the water discharge hose should reach into a water drain line.
- In case of incorrect appliance connection, incorrect use, or servicing by an unauthorized person, the user shall bear the cost of any damage.

Safe use

⚠ DANGER OF FIRE!

Do not use detergents that contain solvents as this could lead to release of poisonous gases, damage to the machine, and risk of fire and explosion.

- Only use detergents intended for the washing machine!
- Only use agents for machine washing and care of laundry. We shall not be responsible for any damages or discolouration of gaskets and plastic parts resulting from incorrect use of bleaching or colouring agents.
- Bleaches that contain chlorine can be replaced with oxygen-based bleaches. Otherwise, a neutralization cycle should be performed by running the Cotton program at the highest temperature. For best results, use hydrogen peroxide or oxygen-based detergents.
- Do not use colourants (dyes) or bleaching substances (substances for discolouration or removal of colourants) as they contain sulphuric compounds that could cause corrosion.
- Excessive use of products containing chlorine compounds increases the risk of premature failure of appliance components. This depends on the concentration of chlorine, exposure time, and temperature.

- Before the start of the washing cycle, press the door on the indicated spot until it locks into place. The door cannot be opened during washing machine operation.
- **We recommend that, before the first wash** you remove any impurities from the drum by using the (Drum Cleaning) program (see chapter *Program chart*).
- **After the washing cycle, close the water tap and pull out the washing machine plug from the power socket.**
- Only use the washing machine for washing laundry, as described in the instruction manual. The machine is not intended for dry cleaning.
- No silver ions are released during the washing programme.
- **To remove limescale deposits,** only use agents with added anti-corrosion protection. Follow the manufacturer's instructions. Finish the descaling process by rinsing several times or by starting the Drum Cleaning program to remove any residual acids (e.g. vinegar...).

Water overflow protection

- If the water level in the appliance rises above the normal level, the water level protection will be activated, which will begin to pump out the water and close the water supply.
- If the water level does not decrease in 60 seconds, the program will be interrupted (see chapter *Errors: what to do?*).

Transporting/storage during the winter

If you transport or store the appliance in vehicles or rooms that are not heated and where the temperature could drop to below freezing point, please do the following:

- Clean the drain pump filter. See chapter *Cleaning the filter*.
- Close the water supply to the washing machine, undo the water supply hose from the water supply tap, and wait until the water flows out of the tap and the hose.

- After the drain pump filter is emptied, there can still be a small amount of water in the machine. This, however, does not affect the quality and will not damage the appliance.
- If the washing machine is to be transported, transport protection has to be re-installed (see chapter *Transport protection*).

Packaging

Remove all packaging. When removing the packaging, make sure not to damage the appliance with a sharp object.

Please sort the materials in compliance with local waste management recommendations (see chapter *DISPOSAL*).

Transport protection

Before using the appliance, remove the three transport bolts and plastic plugs which protect the appliance during transport.

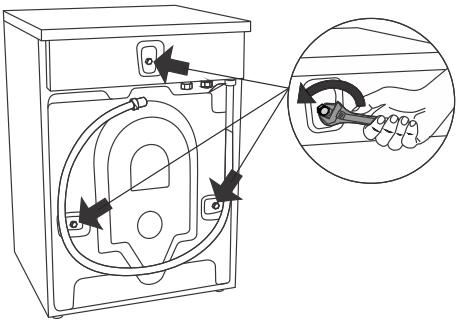

Loosen and use a spanner no. 15 or 17 (depending on the model) to remove the bolts as shown in the figures.

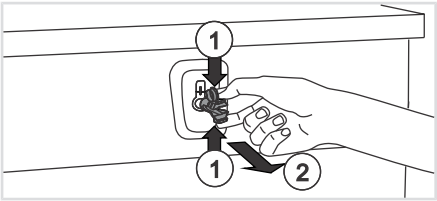

To remove the plastic plugs holding the bolts, squeeze them and (1) then pull them out (2).

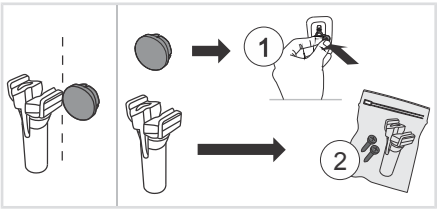

Remove the caps from the plastic plugs. Push the caps into the holes (1), in which the plastic plugs were located. Save the bolts and plastic plugs (2) in case you have to move your washing machine again.

Art. No.	ID:
270698	Bolt
551188	Plastic cap (transport lock)

Please order three pieces of each item!

INFORMATION!

If you wish to transport the washing machine, reinstall the bolts and plastic caps to lock the machine. This will prevent any damage to the machine due to vibrations during transport. If you have lost the transport bolts or plastic caps, replacements can be ordered at your dealer.

Cleaning

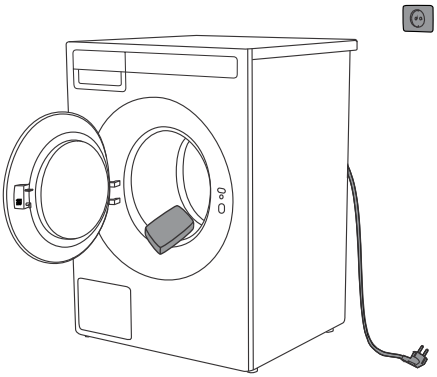

Disconnect the washing machine from the power mains and open the door. Clean the washing machine drum with a damp cloth and a mild detergent.

Connect the washing machine to the power mains, close the washing machine door and run the self cleaning program. See chapter *STEP 5: Choose the program./Program chart*.

WARNING!

Do not use any solvents or cleaning agents that could damage the washing machine (please observe the recommendations and warnings provided by the cleaning agent manufacturers).

Opening the Door

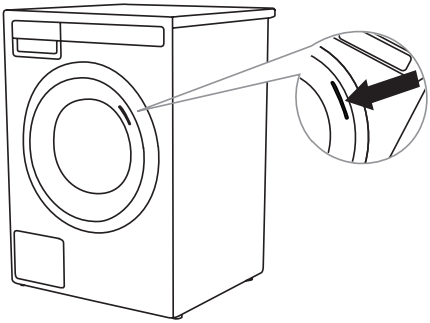

The washing machine door is designed to open on the right side, with a visual indicator in the form of a sticker placed on the front of the door, clearly marking the spot for gripping and opening.

It can be removed depending on aesthetic preference.

INFORMATION!

Before connecting the washing machine to the power mains, wait for at least 2 hours until it reaches room temperature.

Selecting the room

WARNING!

Do not place the washing machine behind lockable or sliding door, or door with a hinge on the opposite side of the door hinge of the washing machine. Place it in the room in such a way that the washing machine door can be freely opened.

INFORMATION!

Floor on which the washing machine is placed must have a concrete base. It should be clean and dry; otherwise, the washing machine may slide. Also, clean the bottom surface of adjustable feet.

INFORMATION!

The washing machine must stand level and stable on a solid base.

Positioning the washing machine

The washing machine can be installed as a built-in or a free-standing unit.

INFORMATION!

When installing the washing machine, the wall outlet should be freely accessible.

Necessary clearance around the washing machine for best performance

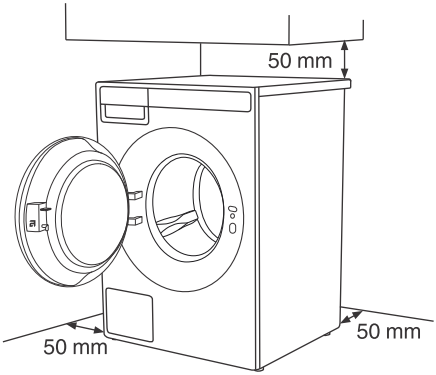

⚠ WARNING!

The washing machine may not be in contact with a wall or adjacent furniture. For optimum washing machine operation, we recommend observing the clearances from the walls as indicated in the figure. In case of failure to observe the minimum required clearances, safe and correct washing machine operation cannot be ensured. Moreover overheating can also occur.

For safety reasons, the minimum distance between the back of the appliance and the wall must be at least 25 mm, and the distance between the appliance and any furniture above it must be at least 40 mm.

Opening the washing machine door (bird's-eye view)

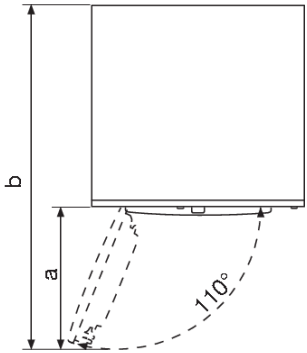

The washing machine door width (a) is 420 mm.

The washing machine depth with the door open (b) is 985 mm.

The washing machine door can be opened up to the angle of 110°.

Placement on a pedestal

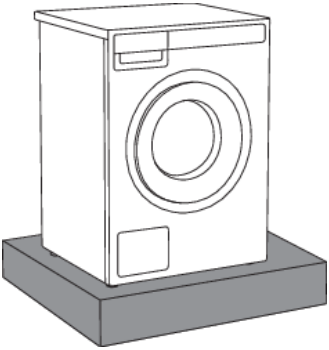

INFORMATION!

If the appliance is installed on a plinth or a similar structure, then the appliance must be fixed to it, to avoid the risk of falling. ASKO original accessories are available for this purpose, complete with fixing instructions.

Adjusting the washing machine feet

Place the washing machine so that it is stable. This will reduce washing machine noise, vibration, movement etc. to minimum.

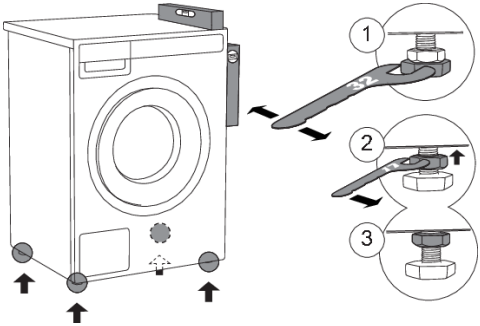

1. Level the washing machine in longitudinal and traverse direction by rotating the adjustable feet (using a spanner no.32).

   The feet allow levelling by +/- 1 cm.
2. When the appropriate height of feet is set, use a spanner no.17 to firmly tighten the lock nuts (counter nuts) towards the bottom of the machine ⬆.
3. Tighten the lock nuts (counter nuts) to the end position.

INFORMATION!

Incorrect levelling of the washing machine with the adjustable legs may cause vibration, appliance sliding across the room, and loud operation. Incorrect levelling of the washing machine is not subject to warranty.

INFORMATION!

Sometimes, unusual or louder noise may appear during appliance operation; these are mostly the result of improper installation.

Free-standing appliance

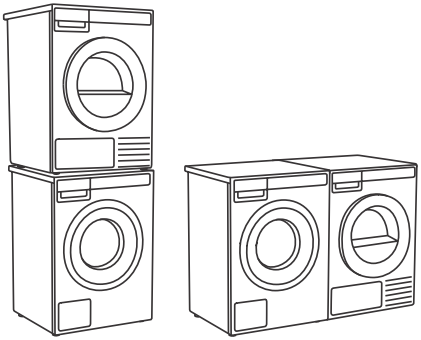

The surface on which the appliance is placed should be clean and level.

The washing machine and the dryer can be placed next to each other.

To stack a dryer on top of a washing machine, use the front feet attachments and the tipping guard. See the next section below.

Stacking an ASKO dryer on top of an ASKO washing machine

⚠ WARNING!

At least two persons are required to install the tumble dryer on top of a washing machine.

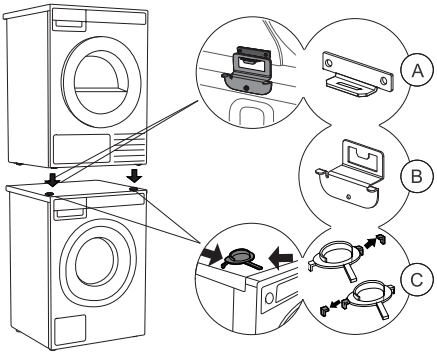

To stack a dryer on top of a washing machine, use the front feet attachments (plastic footrests (C)) and the tipping guard (A+B), supplied in the dryer drum.

If the washing machine and dryer are not of the same dimensions, or if you have installed an intermediate compartment between the washing machine and dryer Hidden Helper, you can purchase a connecting plate intended for the WM86-TD76 combination from your dealer or at the repair shop.

INFORMATION!

For detailed instructions on how to install the ASKO tumble dryer on the ASKO washing machine, refer to the instructions provided with your ASKO tumble dryer.

INFORMATION!

The tipping guard (A+B) corresponds to ASKO washing machines and cannot be installed on washing machines of other brands.

INFORMATION!

Washing machine on which you wish to install the dryer must be able to bear the weight of the dryer (see washing machine's rating plate or technical information).

All ASKO washing machines can bear the weight of the dryer.

Built-in

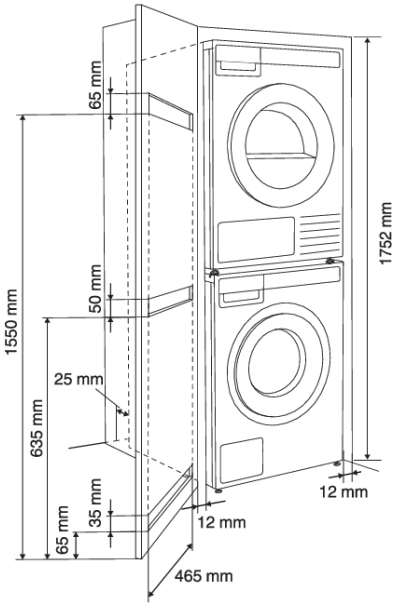

Installation in a cabinet

ASKO's front panel controls make it possible to install the washers and dryers in a cabinet or closet.

Between the machine and the cabinet or wall, ensure that there is a minimum distance of 12 mm and a minimum distance of 25 mm between the rear edge of the top panel of the machine and the cabinet or wall. To ensure proper ventilation, a door with grilles is recommended. Otherwise, there must be ventilation openings in the door. See figure for the smallest feasible ventilation openings.

Ventilation Requirements of ASKO laundry concept or closet installation

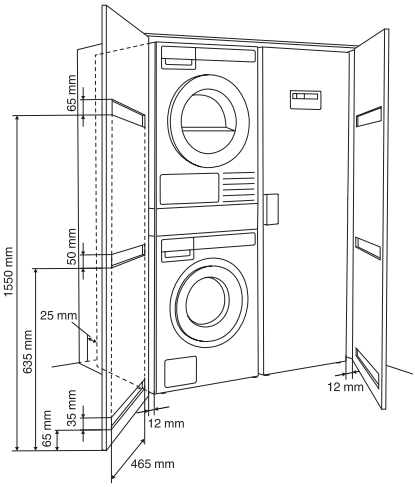

ASKO's front panel controls make it possible to install the washers and dryers in a cabinet or closet.

Make sure there is clearance between appliances and cabinet or wall and 25 mm minimum clearance between the rear edge of the appliance top panel and the cabinet or wall.

When closet or cabinet is closed by the door, we recommend louvered doors, to ensure proper ventilation.

Otherwise, the door must be fitted with ventilation gaps. See figure for dimensions of ventilation openings.

INFORMATION!

Ensure that the washing machine door can be opened without hindrance after installation.

⚠ WARNING!

Disregarding of instructions influences on appliance performance and may also result in failure of the appliance.

Moving the washing machine and transport after installation

If you are moving the washing machine without packaging, open the washing machine door and pull the appliance by holding the washing assembly, as indicated in the figure.

INFORMATION!

For any further moving of the appliance, use the transport protection (the washing machine drum has to be blocked). See chapter *Transport protection*.

Connection to water supply

INFORMATION!

The water inlet hose is included inside the drum of the washing machine. Before use, it must be connected to the appliance and the water supply.

INFORMATION!

The machine has to be connected to water supply by an adequately trained person.

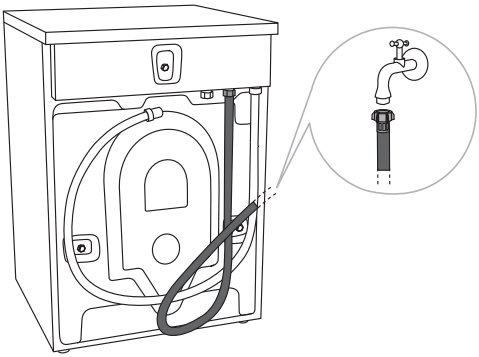

STANDARD CONNECTION

Use the water supply hose to connect the appliance. Water pressure has to be between 0.1 and 1 MPa (approximately 1–10 kp/cm^2, 1-10 bar, 10–100 N/cm^2).

If the hoses are newly installed, we recommend rinsing them to remove any impurities. Otherwise, these impurities could clog the filter in the water connection on the washing machine and thus cut off the water supply.

The water intake hose has to be fastened firmly enough for the hose to have a good seal. After connecting the hose, the seal must be checked for any leaks.

INFORMATION!

Only use the water supply hose supplied with the appliance. Do not use any used or other hoses.

INFORMATION!

If the connection on the supply hose is of different dimensions than the water tap (e.g. 3/4” → 1/2”), use an adapter.

INFORMATION!

When connecting the water supply hose, make sure to connect it in a way that allows adequate and unobstructed water supply.

Installing the drain hose

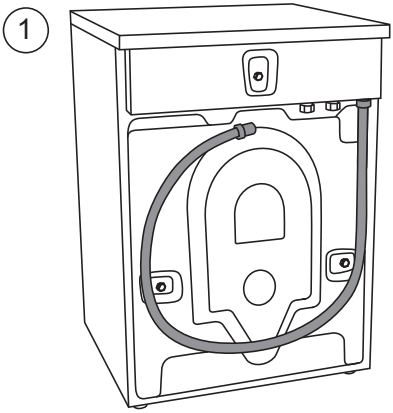

Upon delivery, the washing machine has a drain hose attached to the back wall (Figure 1), which must be connected to the drain.

INFORMATION!

If the drain hose is not correctly attached, safe and correct washing machine operation cannot be ensured.

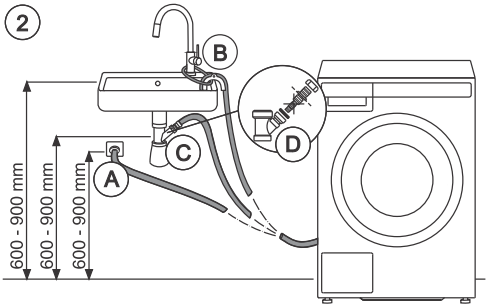

The drain hose can be installed in three ways (see Figure 2):

1. Into a wall drain with a siphon (A), which must be properly installed so that it can be cleaned;
2. Into a sink or bathtub (B). Use a string to attach the hose through the opening in the elbow so that it does not slip to the floor;
3. Directly into the sink drain (C). The diameter of the drain hose must be at least 4 cm. The internal hose diameter should be at least 18 mm (D).

The end of the drain hose can be no more than 900 mm and at least 600 mm from the ground. The lower position (60 cm) is always recommended. Make sure the drain hose is not bent.

Connecting to the power mains

⚠ ELECTRIC SHOCK!

After installation, the washing machine should stand still for two hours before it is connected to the power mains.

Connect the appliance to an earthed power outlet. After installation, the wall outlet should be freely accessible. The outlet should be fitted with an earth contact (in compliance with the relevant regulations).

Connection upon delivery

Information about your washing machine is indicated on the rating (type) plate.

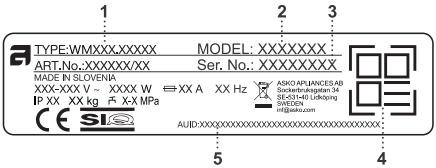

1 - Model type

2 - Model

3 - Serial number

4 - QR code

5 - AUID code

Use the type A differential current protection switch.

⚠ ELECTRIC SHOCK!

We recommend using overvoltage protection (overvoltage protection) to protect the appliance in case of a lightning strike.

⚠ WARNING!

The washing machine may not be connected to the power mains using an extension cord.

INFORMATION!

Do not connect the washing machine to an electrical outlet intended for an electric shaver or hair dryer.

INFORMATION!

Any repair and maintenance pertaining to safety or performance should be done by trained experts.

ASKO Laundry Care - Hidden helpers

The Hidden Helper (single shelf, basket, or ironing board) can be installed between the washing machine and the dryer, or on top of either appliance.

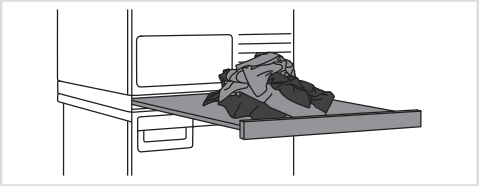

SLIM - Single Shelf

Pull-out shelf. It can be used as an additional surface when folding clothes and sorting socks or for storage. It also makes loading and unloading your laundry much easier. It can be installed between your washer and dryer.

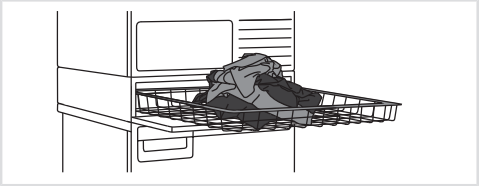

BASKET

A large pull-out basket that is easily accessible via a push-pull door opening. Useful for removing laundry and carrying it to the wardrobe or workbench for ironing and folding.

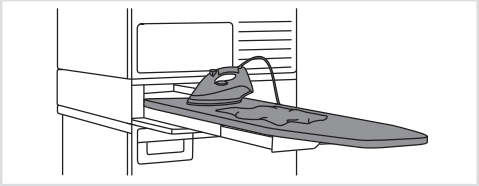

IRONING BOARD

The ironing board is a clever solution. It is always handy when you need to iron your clothes, and it can be easily, safely and invisibly stored away when not in use.

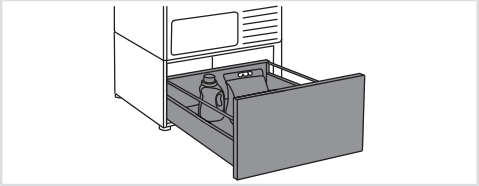

A PEDESTAL DRAWER

A useful storage drawer with a height of 30 cm. Ideal for storing your detergent, softener, coat hangers, pegs, user manuals and other useful items in the laundry area.

The pedestal drawer is installed under the washing machine or the dryer.

Availability depending on market

DENOMINATION	White ART. No.	Titanium ART. No.	Graphite black ART. No.
SLIM	HS60W - 746295	HS60T - 746296	HS60G - 746297
BASKET	HB150W - 746298	HB150T - 746299	HB150G - 746300
IRONING BOARD	HI150W - 746311	HI150T - 746312	HI150G - 746314
A PEDESTAL DRAWER	HP320W - 746315	HP320T - 746316	HP320G - 746317

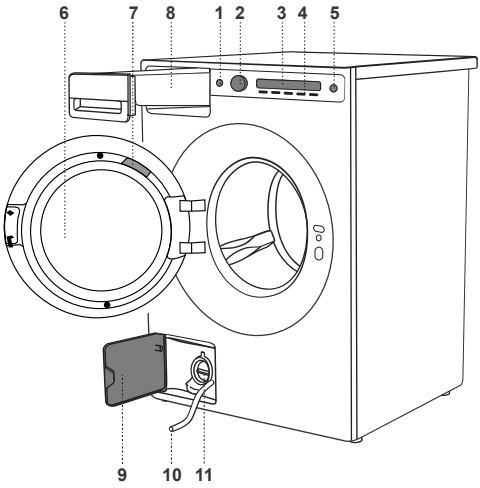

1. Main switch for turning On/Off
2. Program selector knob
3. Display unit
4. Program settings buttons
5. Start/Pause button
6. Washing machine door
7. Rating plate with information about the washing machine (on the inside of the washing machine door) with QR and AUID code
8. Detergent compartment
9. Drain filter cover
10. Water drain hose
11. Drain filter pump (installed behind the drain pump filter)

Detergent compartment

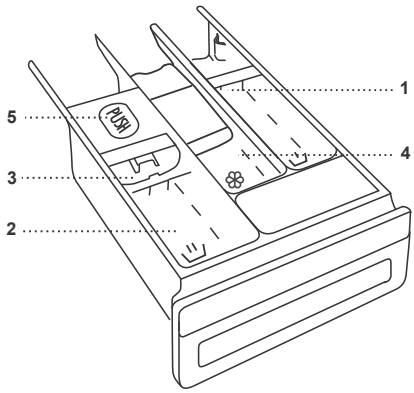

1. Prewash compartment
2. Compartment for main wash liquid detergent.

   Use the foldable barrier (3).
3. Compartment for main wash powder detergent.

   Do not use the foldable barrier (3).
4. Softener / conditioner compartment
5. Tab for detergent compartment removal

When the machine is connected (see chapter *Installation and connection*) and turned on for the first time, first set the following settings:

1 Choose language (Language)

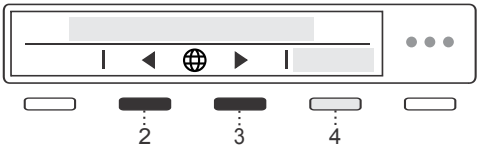

Use the buttons 2 and 3 to navigate the list of languages and select the desired language.

Confirm your selection by pressing 4 Save.

⚠ WARNING!

After the language has been selected, the appliance informs you that it is necessary to remove all transport protection from the appliance. If you have already done so, continue setting up the appliance by pressing 4 Confirm.

After you have selected the language, rotate the button clockwise and select the setting to set the units of measurement.

Unit settings

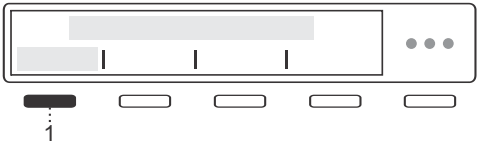

Temperature unit

By pressing 1 set the unit of measurement for temperature:

- Celsius °**C** or
- Fahrenheit °**F**.

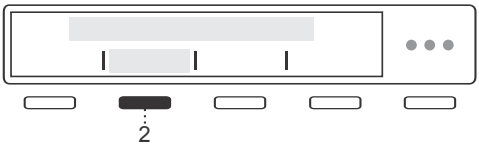

Liquid unit

By pressing 2 set the unit of measurement for liquids:

- Millilitres **ml** or
- Tablespoons **tbsp**.

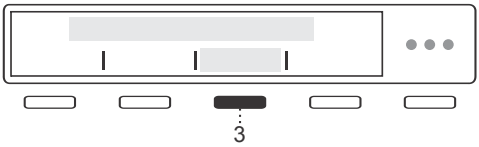

Weight unit

By pressing 3 set the unit of measurement for weight:

- Kilogrammes **kg** or
- Pounds **lbs**.

Confirm your selection by pressing 4 Save.

3 Water hardness

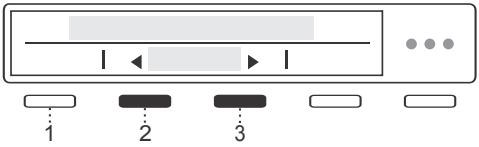

By pressing 2 and 3 choose the water hardness between the following options: Soft / Normal / Hard.

For more information, press 1 Information.

How to determine the hardness of the water:

- use the test strip,
- contact your local water distributor.

Table for water hardness; see chapter *System settings/Water hardness*.

The amount of detergent also depends on the hardness of water. For details, see the detergent packaging. Please contact your local water supply company to check the water hardness in your area.

INFORMATION!

Before the product is dispatched from the factory, every appliance is tested.

As a result, there may be some residual water left in the drain pump filter. This, however, does not affect the quality and will not damage the appliance.

5 Wi-Fi settings

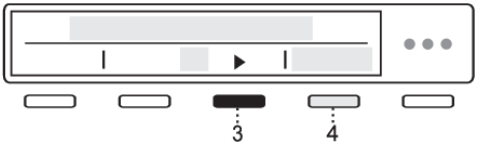

You can turn on the Wi-Fi connection by pressing 3 and confirm your selection by pressing 4 Save.

If you have turned on the Wi-Fi connection, see setup procedure in the below chapter *How to enable Wi-Fi on the device?*.

If you do not want to set the Wi-Fi connection at this time, use the program selector knob to move forward.

Your washing machine is now set up and ready to use.

Appliance connection with the ConnectLife application

ConnectLife is an advanced smart home platform that enables seamless connectivity between people, devices, and services. With the ConnectLife app you can easily monitor and manage your smart devices, receive notifications directly to your smart device and update software (available functions depend on your appliance and region).

To connect your smart device to the ConnectLife platform, you need a home Wi-Fi network (2.4 GHz networks are supported) and a smart device with the app ConnectLife.

Download on the App Store

GET IT ON Google Play

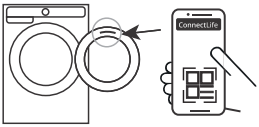

STEP 1: Download the ConnectLife app by scanning the included QR code or searching for it in your favorite app store.

STEP 2: Install the ConnectLife app and create an account.

STEP 3: In the ConnectLife app, go to the »Add device« menu and select the appropriate type of device. Then scan the QR code (it can be found on the rating plate of the appliance; you can also enter the AUID/SN number manually).

STEP 4: The application then guides you through the entire process of connecting the appliance to your smart device.

After a successful connection, the appliance can be operated remotely via the application.

Useful tips for your smart device

INFORMATION!

The QR code of the device required by the app during the installation process can be found on the rating plate of the appliance (see chapter: *Service*).

How to enable Wi-Fi on the device?

1. Turn on the appliance. In the main menu, use the programme selector knob to select *System settings*. Confirm your selection by pressing (4) Enter.
2. Rotate the programme selection knob to the right and select *Wi-Fi settings*. Confirm your selection by pressing (4) Enter.
3. If the *Wi-Fi system* is not switched on, turn it on by pressing (3).
4. Use the programme selector knob to select *Connection setup*, and press (3) *Enter*. Press (4) *Next*.
5. If you do not yet have the ConnectLife application installed on your smartphone (or other smart device), install it now (scan the QR code on the screen), create your user account and login.
   - In the ConnectLife app, open the add device menu.
   - Follow the instructions in ConnectLife.
     - Select the type of appliance.
     - Scan the QR code (it can be found on the rating plate of the appliance).
   - On the appliance, press (4) *Next*.
     - The 5 minute countdown will begin. During this time, connect the app to the appliance.
   - In the ConnectLife app, instructions will guide you through the process of entering the appropriate data for your appliance to connect to your home network.

How to enable remote start of the appliance?

In the main menu, rotate the programme selector knob left to select *Remote start* . To activate, press the Start/Pause button (the door must be closed). The display will show *(Remote start/Activated).*

The appliance is now ready for remote control through ConnectLife app.

INFORMATION!

Remote start will remain active for the next 24 hours unless cancelled. During this time, the appliance can enter standby mode and switch off the display. If this happens, the logo will remain lit, which means that *Remote start* is still active.

How to add another user or multiple users?

See chapter *How to enable Wi-Fi on the device?*and observe points 1 and 2.

Use the programme selector knob to select *Add device*, and press (3) *Enter*. As a new user, if you do not yet have the ConnectLife app installed, install it on your smart device.

- In the ConnectLife app, go to the Add device menu and follow the instructions.
- On the appliance, press (4) *Next*.
- - The 3 minute countdown will begin. During this time, connect the app to the appliance.
- You can then complete and confirm the setting in the app.

How to remove the users?

How to remove a user (Remove device)?

See chapter *How to enable Wi-Fi on the device?*and observe points 1 and 2.

Use the programme selector knob to select *Remove device*, and press (3) *Enter*. Press (4) *Ok*. Follow the instructions on the appliance screen.

INFORMATION!

This step will remove all active users of the appliance. If you want to operate the appliance remotely again you will need to repeat the process of adding a user.

Which Wi-Fi router can be used?

Only 2,4 GHz networks are supported. If the ConnectLife app cannot find your local network during the connection set-up process, check the following:

- your router is operating at the frequency of 2.4 GHz,
- your network is hidden, and
- your signal is strong enough.

Do you have more questions?

Please visit us at **www.connectlife.io** or contact us at **hello@connectlife.io**.

Remotely upgrading the software

When you receive a software update notification, you can choose to update your software from the app menu in your settings. Upon confirmation, the update is performed, the appliance must be in standby mode during this time (more on standby mode in chapter *Table of consumption values*).

Check the software update options in the ConnectLife app.

Tips before washing

This chapter includes several tips on how to prepare the laundry for washing.

Before using the washing machine, carefully remove any solid objects and particles from the textiles you intend to wash to prevent damage to the appliance or clogging of the pump filter. This includes (also check all pockets and flaps):

- solid objects (e.g., screws, clips, small stones, hay, etc.),
- food residues (e.g., bones, dried dough, etc.),
- dried particles of construction materials (e.g., mortar, sand, mud, etc.).

⚠ WARNING!

The manufacturer assumes no responsibility for malfunctions resulting from failure to follow these instructions, which may also affect the validity of the warranty. Furthermore, the manufacturer does not cover service costs in the event of foreign objects in the pump or pump cleaning.

Laundry sorting

Sort the laundry according to:

- how soiled it is,
- colour,
- material,
- permissible washing temperature.

Clothing

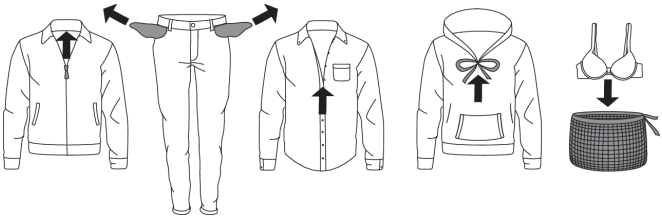

- Sort the laundry by type of fabric, colour, soiling, and allowed washing temperature (see *Program chart*).
- Wash the laundry that sheds a lot of fibre or lint separately from other laundry.
- Empty the pockets. Coins, nails etc. could damage the machine and the fabric.
- Close the buttons and zippers, tie any ribbons, and turn the pockets inside out; remove any metal clips that could damage the laundry and washing machine interior, or clog the drain.
- Turn delicate items inside out. This will decrease the risk of tear and colour fading.
- Place very sensitive clothes and small items in a special-purpose laundry washing bag.

  (The special-purpose laundry bag is available as an optional accessory.)

Laundry symbols

Observe the laundry symbols.

Textile maintenance symbols:

Normal wash;

Sensitive laundry

90 90	Max. washing temp. 90°C	40 40	Max. washing temp. 40°C		Hand wash only
60 60	Max. washing temp. 60°C	30 30	Max. washing temp. 30°C		Do not wash

Bleaching

Cl	Bleaching in cool water		Bleaching not allowed

Dry cleaning

A	Dry cleaning with all agents	P	Perchloroethylene R11, R113, petroleum
F	Dry cleaning in kerosene, pure alcohol, and R113		Dry cleaning not allowed

Ironing

	Hot ironing, max. 200°C		Hot ironing, max. 110°C
	Hot ironing, max. 150°C		Ironing not allowed

Drying

Natural drying		**Tumble drying**	
	Drying on a flat surface		Drying at high temperatures
	Drying without prior spinning		Drying at low temperatures
	Drying on a clothes line or a hanger		Tumble drying not allowed

Laundry types

Dyed cotton

Laundry made of dyed cotton which is to be washed at 40 °C should be first washed at a temperature of 60 °C to remove the excess dye. If this is not done, there is danger of dye being washed out of such items. To maintain the colour of the fabric, use bleach-free detergent.

Unbleached linen

Unbleached linen fabrics should be washed at 60 °C with a detergent free of bleach or optical bleaching agents. Heavily soiled linen laundry may be occasionally washed at higher temperatures, but do not do this too often as heat could ruin the shine and strength of linen laundry.

Wool

These fabrics are intended for either machine or hand wash. The Wool/Hand Wash program is equally gentle or even gentler than an actual hand wash.

Wool in particular is sensitive to washing and similar procedures.

When selecting the Wool/Hand wash program use wool detergent and avoid using fabric softener.

If you do not wish to spin your clothes, select a setting without spinning (see chapter *STEP 6: Choosing the program settings*). However, most clothes are able to withstand a short spinning period. Top spinning speed available is 800 rpm.

Viscose and synthetic fibres

Materials made of viscose and some synthetic fibres are highly sensitive, and require a lot of space in order not to crease. When washing fill the recommended load for the program and choose a program with spinning speed of no more than 1200 rpm.

INFORMATION!

Viscose and acetates are fragile when wet.

Reducing allergic reactions

(Only in some models)

Possibility of washing with the Anti-Allergy Synthetics program. This program, program settings, and features should be used for people with sensitive skin, such as those suffering from allergies, or small children. We recommend turning the garments inside out as this will also thoroughly wash out the skin residues.

Saving time and energy

Save time by using Speed mode and save power with the Eco (ecological) washing mode (Green mode).

Economy and efficiency

You can save a lot of energy by not using the programs operating at higher temperatures.

Select the Quick program if you wish to only refresh the laundry or use the Time program. This will save water and power.

Selecting the maximum spinning speed will reduce power consumption if you dry the clothes in a dryer or a drying cabinet.

Detergents

INFORMATION!

Detergents carrying the environment protection label are less harmful to the environment.

Only use detergents for machine washing.

When using thick liquid laundry care products, we recommend diluting them with water to prevent clogging the dispenser tray drain.
Liquid detergents are intended for washing programmes without a prewash cycle.

Only add the detergents in compliance with the recommendations by detergent manufacturers. Recommended amount of washing detergent at certain loads and water hardness levels are specified on the detergent packaging.

Dosing accessories

To correctly dose detergents, especially liquid ones, use the accessories provided by the detergent manufacturer.

Stains

If your clothes are soiled with stubborn stains (blood, eggs, coffee, grass etc.), they should be appropriately treated before the wash. Then, wash your laundry using the special programs (if your washing machine has them).

Before using special-purpose stain removers, try using the natural methods that do not harm the environment on less stubborn stains.

However, prompt action is required! Soak the stain with an absorbent sponge or a paper towel; then, rinse with cold (lukewarm) water – but never with hot water!

When using bleaches or stain removal agents, there is danger of rust (corrosion) and discolouration.

WARNING!

To protect the environment, we advise against using powerful chemicals.

Do not use any chemical substances or agents; only use the stain removing detergents.

Dyeing fabrics

If you want to dye fabrics in the machine, choose the Cotton program with the option to select the Super rinse function. Choose the temperature according to the dye manufacturer's recommendations. If you dye mixed fabrics, such as polyester/cotton, choose a low spinning speed.

After dyeing use the Drum Cleaning program. Use the usual amount of detergent.

When using bleaches or stain removal agents, there is danger of rust (corrosion) and discolouration.

⚠ WARNING!

To protect the environment, we advise against using powerful chemicals.

If you wash at low temperatures and/or with liquid detergents, there is a risk of developing microorganisms and an unpleasant odour in the washing machine. Leave the washing machine door open after each wash to allow the appliance to dry. If you detect an unpleasant odour, run the Drum Cleaning programme.

To prevent and remove limescale deposits only use agents with added anti-corrosion protection. Observe the cleaning agent manufacturer's instructions. To remove limescale deposits, we recommend starting the Drum Cleaning programme. Add spirit vinegar (2 dl).

We recommend avoiding washing very small amounts of laundry as this will lead to excessive use of energy and poorer washing machine performance.
You can save energy and water by filling up the washing machine to the capacity specified by the manufacturer for each programme.

STEP 1: Sort the laundry

See chapter *Tips before washing*.

INFORMATION!

Use a washing net for underwire bras. Empty the pockets. Coins, nails etc. could damage the machine and the fabric.

STEP 2: Turn on the main switch.

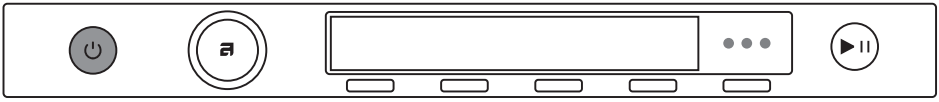

On/Off

Press the ⏻ on/off button.

STEP 3: Open the washing machine door and insert the laundry

Open the washing machine door by pulling the handle towards you.

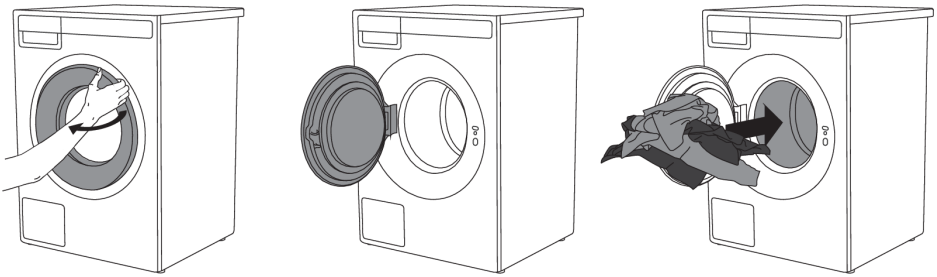

Place the laundry into the washing machine drum.

Before doing so, make sure the drum is empty.

Do not overload the drum!

If the washing machine drum is too full, the laundry will not be washed as thoroughly.

STEP 4: Add the detergent and the softener.

Recommended amount of detergent is usually specified on the detergent packaging. When washing a smaller amount of laundry, the amount of detergent used can be decreased.

Observe manufacturers' recommendations regarding the type of detergent suitable for certain temperatures, load size, and water hardness.

Powder detergent

INFORMATION!

We recommend adding the powder detergent immediately before the washing cycle. Otherwise, make sure the detergent compartment is completely dry before adding the powder detergent, as otherwise, the powder detergent may cake before the start of the washing process.

Liquid detergent

When using liquid detergent and softeners, follow the detergent manufacturer's recommendations. When using thick detergents, we always recommend using the laundry balls. In the detergent compartment, use the separator (3); see figure in the chapter Description of the washing machine *Washing machine description Detergent compartment*.

Add the liquid detergent to the compartment for the main wash (1).

Laundry ball or washing bag

If you are using a laundry ball or a washing bag, place it directly into the drum and choose a program without any prewash.

INFORMATION!

An excessive amount of detergent will not improve washing results. Rather, it will lead to foaming and increase the environmental impact. We recommend using less detergent. Only increase the dosage if you are not satisfied with the washing results.

Softener

Pour the softener into the detergent compartment, into the compartment with the symbol ❀. Observe the recommendation on the conditioner packaging.

INFORMATION!

Do not fill the conditioner compartment over the max. indication (maximum indicated level). Otherwise, the conditioner will be added to the washing machine drum too soon, leading to poorer washing effect.

STEP 5: Choose the program.

Choose the program by rotating the Program selector knob in either direction.

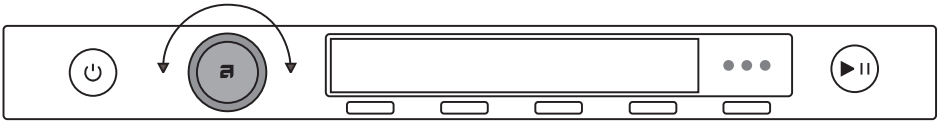

Choose the program depending on the type and dirt level of laundry (see chapter *Tips before washing*).

Estimated program duration will appear on the display.

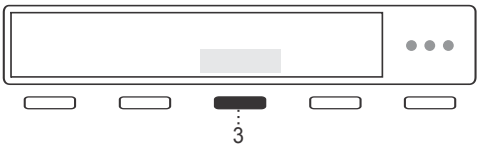

With the selected program, you can press key 5 and then key 3 Information to display a brief description of the program and the maximum load.

Extra program settings can also be selected for each program. See *STEP 6: Choosing the program settings*.

Program chart

Choose between the following programs:

Program	Capacity (kg)	Spin Speed (rpm)[1]	Description
Eco 40-60 1)	9 FL	1400	Normally soiled cotton laundry that can be washed at both 40°C and 60°C together in the same cycle. The programme is used to assess compliance with EU ecodesign legislation.
Cotton 2) cold–90°C	9 FL	1400	Use the Cotton program to wash towels, sheets, underwear, bed linen, etc. Select a lower temperature for less soiled laundry and a higher temperature for heavily soiled clothes.
Mix/Synthetics 2) cold–60°C	4	1200	The MIX/Synthetic program is adapted for clothing made of synthetic and mixed fibres or viscose and for easy care of cotton laundry
White laundry cold–90°C	4.5 HL	1400	Use the white laundry program for normally to heavily soiled white laundry. Select a lower temperature for less soiled laundry and a higher temperature for heavily soiled clothes.
Coloured laundry cold–60°C	4.5 HL	1400	Use the coloured laundry program for normally to heavily soiled coloured laundry. Select a lower temperature for less soiled laundry and a higher temperature for heavily soiled clothes.

Choose between the following programs:

Program	Capacity (kg)	Spin Speed (rpm)[1]	Description
Wool/Hand wash cold–40°C	2	1200	The Wool/Hand wash program is a gentle program for wool, silk and clothing that must be washed by hand. The laundry will be washed at a low intensity and will not be damaged. Select the appropriate temperature according to the label on your clothes.
Delicates cold–40°C	4	1000	The program is ideal for delicate fabrics, as it washes them gently and reduces wear and tear. Fabrics retain their quality and their life is extended.
Sportswear 30°C–60°C	3.5	1200	The program is intended for garments with a membrane, garments made of waterproof or breathable fabrics that require easy care. **Do not use conditioner with this program!**
Outerwear cold–40°C	3.5	1200	The program is suitable for washing winter jackets, coats and all outerwear that is heavily soiled.
Time program cold–60°C	2	1400	Use the Time program to set the program time, from 20 minutes to 2 hours. Be sure to choose the time and temperature appropriate to the degree of soiling of the laundry.
Steam Refresh	1.5	/	The program allows clothes to be softened and disinfected. Steam refresh reduces or eliminates the need for ironing. After steam refresh the laundry may be slightly damp or contain minor traces of water.
Rinse	9 FL	1400	The Rinse program is a short program with two cold rinses and a short spin cycle.
Spinning	9 FL	1400	Use the program when you only wish to spin the laundry.
Drain		/	If you only wish to pump out the water from the washing machine, choose the Drain program.
Drum Cleaning		/	This programme is used for cleaning the drum and removing the residue of detergent and bacteria. To select the programme, rotate the program selector knob to the left or to the right to the Drum clean (Cleaning programme) position. Other extra functions cannot be selected. The drum must be empty.**Do not add detergent or softener!** You can add some spirit vinegar (approx. 2 dl) or sodium bicarbonate (1 tablespoon or 15 g) for effective descaling. We recommend that you use the program at least once a month.

1) Test programme for compliance with the Commission Regulation (EU) No. 2019/2023 on ecodesign and Regulation No. 2019/2014 on energy labelling.

2) Information for test institutes: During a test in compliance with the applicable standard EN60456, you must select the maximal possible spin speed.

FL Full load

HL Half load

cold Cold wash

INFORMATION!

In terms of energy and water consumption, programmes that operate at lower temperatures and last longer are generally the most efficient.

INFORMATION!

Noise and residual moisture content are affected by the spinning rate: the higher the spinning rate in the spin cycle, the higher the noise and the lower the residual moisture content.

Recommendations for detergents under Regulation (EU) No. 1015/2010

Program	Detergent			
	Universal	For coloured laundry	For delicate laundry and wool	Special
Eco 40-60	✓	✓		
Cotton	✓	✓		
Mix/Synthetics	✓	✓		
White laundry	✓			✓
Coloured laundry	✓	✓		
Wool/Hand wash			✓	✓
Delicates			✓	✓
Sportswear		✓	✓	✓
Outerwear		✓	✓	✓
Time program	✓	✓		
Steam Refresh				
Rinse				
Spinning				
Drain				
Drum Cleaning				

STEP 6: Choosing the program settings

Using the program settings, the washing programs can be further adjusted to your wishes.

Some selected program settings will remain stored after the wash is complete and may be changed subsequently. The following settings are saved: spinning, ADS, washing modes, temperature, extra

rinse, prewash and extra water. Other settings such as: small load, steam disinfection, rinsing and stopping, anti-creasing, delayed start and manual assist cannot be saved.

Selected program settings will remain stored after the end of the washing cycle and may be changed subsequently (except for delayed start which is not stored after the wash is complete).

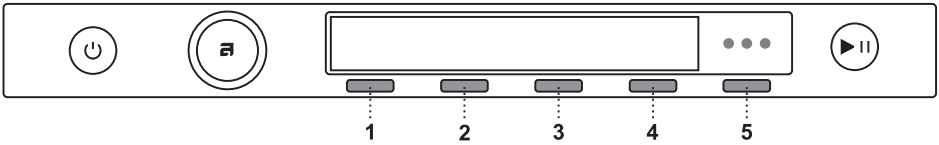

1. Washing mode (Mode)
2. Temperature
3. Spin
4. Dose
5. Extra functions

Choose the program settings before pressing the **Start**/Pause button.

When a washing program is in progress, program settings cannot be changed.

INFORMATION!

Press and hold the button below the program setting to display information about that program setting.

Following are the programme settings that may be selected using the buttons 1 to 4:

Washing mode (Mode)

The following washing modes are available:

- Default mode
  (Basic setting)
- (Eco) Green mode
  (Wash that saves energy; longer washing time, lower water consumption).
- Speed mode
  (Time-saving wash; shorter washing times, higher water and energy consumption).
  In the Cotton program, we recommend a half-load.
- Intensive mode
  (Wash that improves cleaning performance, with extra water and extended washing time).
- Night mode
  (Wash that reduces noise and extends washing time.)

Temperature

The actual available temperature options, will depend on the selected program.

The following temperatures are available for the selected program:

Cold wash and 20/30/40/50/60/70/80/90 °C.

Spin

The following spinning rates are available for the selected program: max. (rpm) /... / no Drain (max. rpm = depends on the model).

Default setting is 1400 rpm; it depends on the selected program (spin rate can be changed – reduced or increased (only in some models)).

The actual available spin speed will depend on the selected washing program.

Manual assist

There are several different ways to dispense detergent:

- Manual dose,
- Manual assist,

With the Manual Assist function, the washing machine will recommend the optimum amount of detergent according to the selected settings.

Recommended amount of detergent depends on the water hardness, the selected wash program, and the amount of laundry.

After activating the Manual Assist function, you can select the dirt level of the laundry (3 levels are available). Once you have selected the dirt level, press button 4 (OK). Then, press the Start button, and the washing machine will begin calculating the appropriate amount of detergent. The recommended amount will be displayed on the display.

Left: Concentrated amount of detergent. Right: Non-concentrated amount of detergent. Add the recommended amount of detergent to the dosing container (in the main wash compartment) and press the Start button to begin washing.

For more program settings, press the button (5) and then confirm the selection with the (1) More options button. Turn the knob to select the desired setting. Press the button (3) to confirm the setting.

The following program settings are available:

Small load

The small load function adjusts the use of water and energy to ensure thorough washing while reducing waste. The small laundry load can be activated to show the correct time if you add up to 2,5 kg of laundry.

Confirm the selection by pressing (3).

Prewash

To use prewash before the main wash, choose the Prewash option. Use of this setting is recommended for heavily soiled laundry or for laundry with stubborn surface stains.

You can select prewash by pressing 3. Confirm the selection by pressing 4 OK.

Add the prewash detergent into the prewash compartment ⊔ and the main wash detergent into the main wash compartment ⊔⊔ of the detergent compartment (see chapter »*DETERGENT COMPARTMENT*«).

High water level

The High Water Level option increases the amount of water used during the main wash and rinsing phases and is available with certain programmes.

This setting enables more thorough washing and rinsing for heavily soiled laundry, better care of larger or delicate fabrics, and more effective removal of stains and detergent residues.

Confirm the selection by pressing 3. Confirm the selection by pressing 4 OK.

Super rinse

Choose between **turning on** or **turning off** the Super rinse.

The setting helps to ensure that the clothes are rinsed thoroughly without leaving behind any detergent residue or dirt. This is recommended for persons with highly sensitive skin and/or in areas with very soft water. The setting allows for double extra rinsing.

Confirm the selection by pressing 3. Confirm the selection by pressing 4 OK.

Rinse and hold

The setting does not include a final spin cycle. If **enabled** (On), the laundry remains in the final rinse water after the wash is completed, awaiting your next selected step.

You can resume in the following ways:

Unlock the door: the machine drains the water and stops the program.

Spin and finish: spinning is carried out and the wash is completed.

The purpose of the setting is to prevent the garments from developing a bad smell, as it allows you to complete the program after several hours when the user determines how to resume and complete the spin cycle.

Confirm the selection by pressing 3. Confirm the selection by pressing 4 OK.

Anti crease

To prevent creasing, select the Anti-crease function (gentle tumbling). This function is recommended for delicate laundry.

Confirm the selection by pressing 3. Confirm the selection by pressing 4 OK.

It will be carried out after the washing cycle.

Delay start

Choose the delayed start setting when you wish the washing program to start after a certain period of time.

You can choose a start delay time from **30 minutes** to 6 hours in 30-minute steps, and then from 6 hours to 24 hours in 1-hour steps.

Press the **Start**/Pause button to start. When the countdown reaches zero, the selected washing program will start automatically.

If you do not take any action for 5 minutes, the display will turn off.
By pressing the On/Off button you can reactivate it. The display will show the countdown to the start of the washing cycle.
The display will activate 1 minute before the start of the washing cycle.

After the countdown, washing time will be indicated on the display.

If you want to cancel the delayed start and initiate the washing process immediately, press Skip. When the Delayed start is already set, it can be cancelled by pressing the Start/Pause button for 3 seconds to return to initial selection.

INFORMATION!

If you have set the delayed start function and you are using liquid detergent, we do not recommend choosing a programme with a pre-wash cycle.

Add to favourite

To add the selected program to your favourites, confirm your selection by pressing 3.

Next to the selected program, the following icon will light up ♥. The program will be stored.

You can store up to 6 favourite programmes.

- **Removing a favourite programme**

  When all 6 slots are taken, it is not possible to set a new programme.

  To add a new favourite programme, you need to delete an existing one beforehand.

  To remove a favourite program, select the program you want to remove. Select the setting *Add to favourite* and confirm the removal of the favourite program by pressing 3 Remove. The program will be removed.

To select System settings, rotate the program selector knob all the way to the right and confirm the selection by pressing 4 *Enter*.

If you do not take any action for 5 minutes, the display will switch to standby mode.

You activate it by pressing the On/Off button or by opening the dryer door.

INFORMATION!

Some settings may not be available on washing programs.

STEP 7: Start the wash

Close the washing machine door and press the **Start**/Pause button.

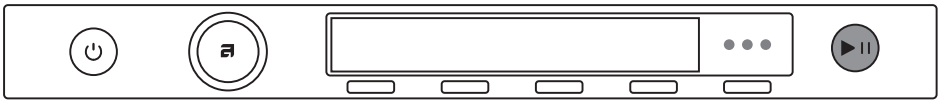

▶ Start (pressed briefly – start/resume)

❚❚ Pause (short press of the button - pause)

Cancel (press and hold the button for 3 seconds)

Remaining time

Depending on the selected program, anticipated washing time will be displayed in hours and minutes.

Actual washing time will depend on the selected program, load, type of laundry, spin speed etc.

Actual washing time may be longer or shorter than initially displayed.

Remaining time will be updated during the program duration, depending on the actual amount of laundry and amount of water pumped into the machine. The last remaining time update takes place before the final spinning cycle.

In case of uneven distribution of laundry, the time on the display will flash and it will not count down. Once the laundry is evenly redistributed, the washing time will continue and it will stop flashing.

Adding or removing laundry after the start of the program

To add or remove laundry during the progress of a washing program, use the Start/**Pause** button to stop the program and then select Add clothes.

The door may be opened when the water is pumped from the machine (but not completely pumped out). Then, add or remove the laundry. Close the door and resume the program. Press **Start**/Pause.

The program will resume from the point at which it was interrupted.

If the door cannot be opened, it is possible that the temperature in the machine is too high, and you won't be able to add the laundry.

Also, if the door cannot be opened, it is possible that the program has been running for too long and any laundry added at that point would not be efficiently washed.

Pausing, stopping or changing the program

To pause the programme, briefly press the Start/**Pause** button.

To resume the program, press the **Start**/Pause button again.

To stop the washing program, press the Start/**Pause** button and hold it for 3 seconds.

Select Stop program. The program is cancelled and the water is pumped out of the machine if necessary. Only then can you open the washing machine door. Use the program selector knob to select a new program, add detergent if necessary, and press **Start**/Pause.

INFORMATION!

If the temperature in the drum is very high, then cooling procedure starts before program is canceled.

By pressing On/Off the Washing program can be interrupted.

The washing machine will switch off.

After the appliance is switched back on, press the **Start**/Pause button to resume the program.

INFORMATION!

Do not open the detergent compartment while the appliance is operating.

INFORMATION!

In some cases the door may be locked although no program is in progress (e.g. in case of an error). To unlock the door, press the Start/Pause button and hold it for a while.

Cycle counter

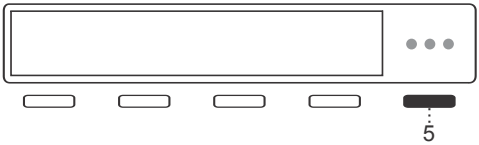

Display of the number of cycles performed. Press and hold key 5 inside the program for 3 seconds.

STEP 8: End of program

After the end of the washing program the display will indicate that the program has been successfully finished.

You can open the door.

If you have additionally selected the Anti crease function, gentle tumbling will continue after the end of the washing program in order to prevent creasing.

Open the door towards you and remove the laundry from the washing machine.

Make sure the washing machine drum is empty.

If you do not take any action within 5 minutes after the end of the program, the display will switch off to standby mode in order to save power.

The display will light up again if you press any of the buttons or rotate the program selector knob.

WARNING!

After the washing cycle, close the water tap and pull out the washing machine plug from the power socket.

System settings

Enter the *System settings* by rotating the programme selector knob in the main menu all the way to the right.

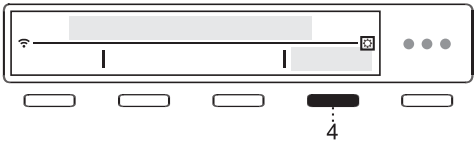

Confirm your selection by pressing 4 *Enter*.

Press the 1 *Exit* in any setting to return to the main menu.

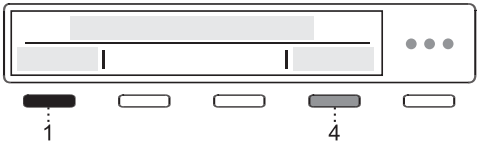

Certain settings allow a short description to be displayed by pressing 4 *Information.*

Then, use the program selector knob to scroll the list of settings that can be changed.

Choose Language

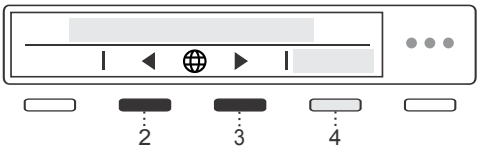

By pressing 2 or 3 you can navigate the list of languages.

Confirm your selection by pressing 4 *Save*.

Lock

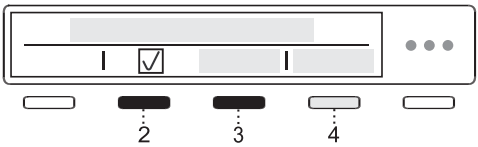

Use the setting to disable the on-screen buttons so that children may not inadvertently trigger or change the cycle.

You can Lock the appliance by pressing 2 or 3. For further information, press 4 *Information.*

Choose between **turning on** or **turning off** the lock.

By pressing 4 *Information* brief information about the setting will appear on the display unit.

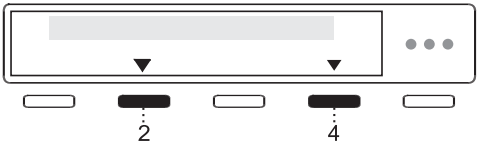

When this option is on, you can activate and deactivate it by pressing 2 and 4 and hold them for 3 seconds.

When the lock is activated, no other function can be selected.

After 1 minute of inactivity on the appliance, the lock will be activated automatically.

Water hardness

Choose water hardness between the following settings: soft / normal / hard.

Confirm the selection by pressing 2 or 3.

Water hardness can be measured with the measuring strip. Check the information on water hardness with your local water supply company or authority.

Water hardness is determined using the following scales: the German water hardness scale (°dH) and the French water hardness scale (°fH).

Water hardness	Hardness levels			
	°dH (°N)	m mol/l	°fH(°F)	p.p.m.
1 – soft	< 8.4	< 1.5	< 15	< 150
2 – normal	8.4 - 14	1.5 - 2-5	15 - 25	150 - 250
3 – hard	> 14	> 2.5	> 25	> 250

If the water hardness exceeds 50 °dH (89 °fH), we recommend the connection of an external water softener.

Contact the local waterworks, or measure the water hardness using the supplied test strip, to check the water hardness in your area.

Unit settings

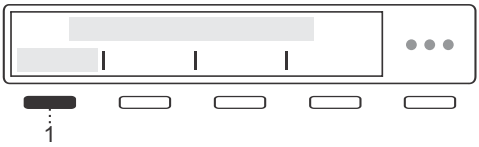

Temperature unit

By pressing 1 set the unit of measurement for temperature:

- Celsius **°C** or
- Fahrenheit **°F**.

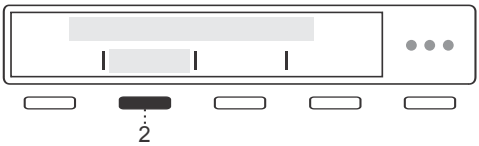

Liquid unit

By pressing 2 set the unit of measurement for liquids:

- Millilitres **ml** or
- Tablespoons **tbsp**.

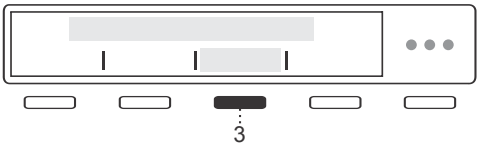

Weight unit

By pressing 3 set the unit of measurement for weight:

- Kilogrammes **kg** or
- Pounds **lbs**.

Confirm your selection by pressing 4 Save .

Program management

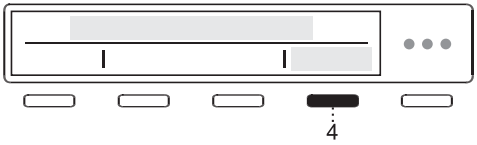

Press 4 *Enter*to display a set of programmes.

The Main menu includes the entire set of programs that you can choose using the Program selector knob.

This setting allows only displaying the selected program in the Main menu.

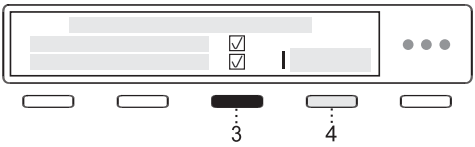

Use the program selector knob to choose between programs. Confirm your selection by pressing 3. This is how you define the display of the program in the main menu.

Symbol ☑ will appear next to the selected program.

When you have a set of programmes selected, confirm the change by pressing 4 *Save*.

If you have not made any changes, press 4 *Exit*.

Only programs indicated with ☑ will appear on the display unit.

Display brightness

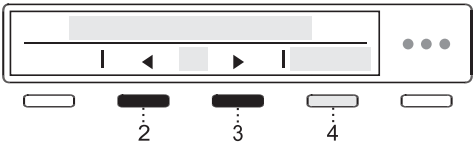

You can set the **Brightness** of the display.

By pressing 2 or 3 you can choose the brightness of the display from 1 to 5.

Confirm your selection by pressing 4 *Save*.

Sound volume

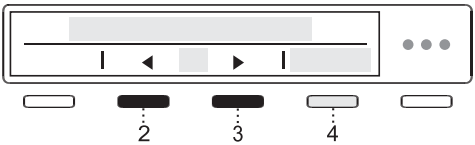

By pressing 2 or 3 you may choose the acoustic signal volume.

During selection, the acoustic signal will be played with the currently highlighted volume.

Confirm your selection by pressing 4 *Save*.

Display logotype

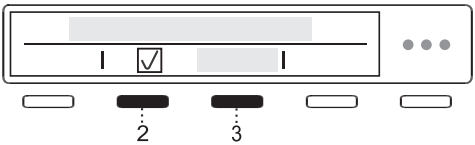

By pressing 2 or 3 or you can choose between **switching the logo On/Off**.

On = display the logo at switch-on

Off = do not display the logo at switch-on

Wi-Fi settings

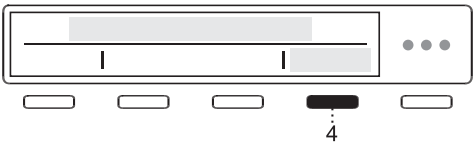

For settings, press 4 *Enter*.

Refer to the setting procedure in the chapter Before first use *How to enable Wi-Fi on the device?*.

To return to "System settings" press 4 *Exit*.

Test mode

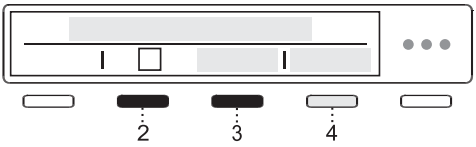

The appliance simulates the display and operation of the normal cycle for silent visual display. Only for stores.

By pressing 2 or 3 you can choose between **turning on** or **turning off**.

For further information, press 4 *Information*.
The setting allows you to inspect the washing simulation without the machine running.

Errors (Failure read-out)

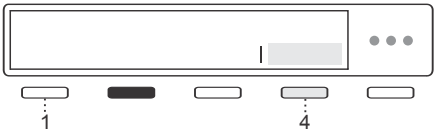

The last three errors displayed to the user are displayed in the failure read-out menu.

For more information see chapter *Errors: what to do?*.

Reset program list

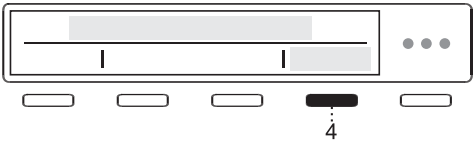

By pressing 4 *Enter* you enter the Reset program list (Reset program list), which means that all favourite programmes will be deleted. Other settings will not be affected.

Confirm the reset by pressing 4 *OK*.

Factory default settings

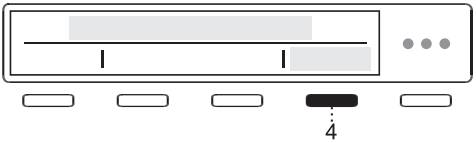

By pressing 4 *Enter* you enter Factory settings, which means that the settings will return to the original settings (your own settings and all favourite programs will be deleted).

Confirm the reset by pressing 4 *OK*.

Cleaning the dispenser tray

⚠ ELECTRIC SHOCK!

Always disconnect the washing machine from the power mains before cleaning.

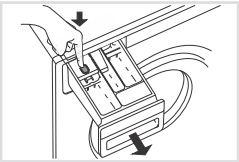

1 Press the tab to completely remove the detergent compartment from its housing.

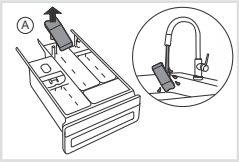

2 Rinse and thoroughly clean the tray. You may also remove the cap from the plug in the conditioner compartment (A). Clean any residue from the cap and tube.

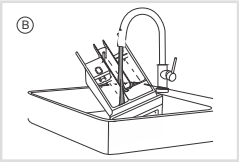

Clean the detergent compartment (B) interior.

Replace the cap on the plug.

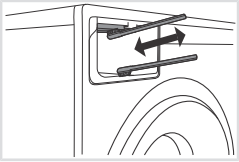

3 Use a brush to clean the nozzles on the upper side of the detergent compartment housing.

After a washing program, nozzles that clean the interior of the dispenser are automatically switched on (only available in some models).

Use a brush to clean the lower part of the detergent compartment housing.

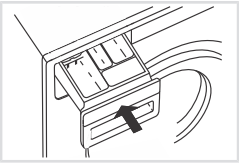

4 Replace the detergent dispenser into its housing.

Close the detergent compartment!

INFORMATION!

Do not wash the detergent compartment in the dishwasher!

Cleaning the filter

The washing machine has a filter that will retain smaller objects such as coins, buttons, hair etc.

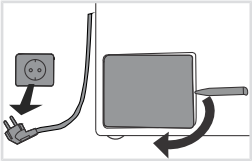

1 Before cleaning, drain the water from the washing machine using the Drain program, and disconnect the washing machine from the power mains.

Open the pump filter cover using appropriate tools (emergency door opening tool is located on the back side of the dispenser).

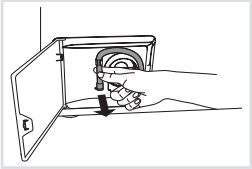

2 Release the water drain hose from the holder.

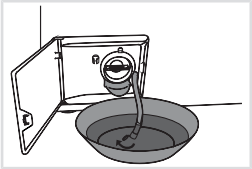

3 Before cleaning the filter, drain the water from the washing machine by placing the end of the water drain hose over a large shallow container and opening the cap on the water drain hose.

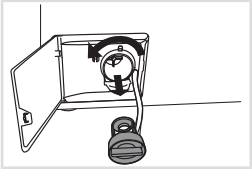

4 Gradually rotate the filter in the counter-clockwise direction and pull it out.

5 Clean the filter thoroughly under running water.

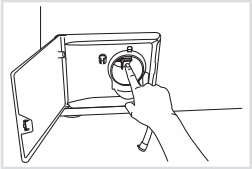

6 Remove all objects and impurities from the filter housing and the impeller.

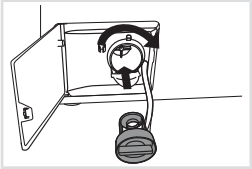

7 Replace the filter as shown in the figure and fasten it by rotating in the clockwise direction. For a good seal, the filter seal surface should be clean.

Reattach the drain hose and close the lid.

INFORMATION!

We recommend regular cleaning of the pump filter once a month. When washing very fleecy, very dirty or old laundry, do it more often.

Cleaning the appliance exterior

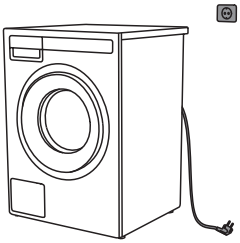

Clean the appliance exterior and the display unit using a soft damp cotton cloth and water. **Do not use solvents or abrasive cleaners that could damage the appliance** (please observe the recommendations and warnings provided by the manufacturers of the cleaning agents).

INFORMATION!

Do not clean the machine with a jet of water!

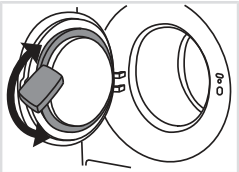

After every wash, wipe the rubber door gasket and remove any objects that may have become stuck in the gasket to extend its useful life.

Cleaning the washing machine interior against odours

Modern detergents often allow washing clothes at low temperatures. This means that residue may accumulate in the washing machine, which in turn could cause odours.

To avoid bad odours, we recommend running the Drum Cleaning program once per month . Use a small amount of powder detergent, without any laundry.

If you are using hard water

If you are washing with hard water (high limescale content), a greyish-white coating may appear on the washing machine drum. Remove this coating by pouring alcohol vinegar (pickling vinegar) into the washing machine drum (approx. 2 dl) or sodium bicarbonate (1 tablespoon or 15 g) and select any program in which the temperature reaches 90 °C or the Drum cleaning program. See chapter *STEP 5: Program chart*.

Repeat the process as necessary.

Disturbances from the environment (e.g. the power grid) may result in various error reports (see table below: Fault/Error). In such case:

- Switch off the appliance, wait for at least 1 minute, switch on the appliance again and repeat the washing program.
- If the error persists, call an authorized service center.
- Most **interferences** during operation can be resolved by the user (see table below: Fault/Error).
- **Repairs** may only be carried out by an adequately trained person.
- Repair or any warranty claim resulting from incorrect connection or use of the washing machine shall not be covered by the warranty. In such cases, the costs of repair shall be charged to the user.

INFORMATION!

The warranty does not cover the errors or failures resulting from disturbances from the environment (lightning strike, power grid failures, natural disasters etc.).

The following lists all the errors that the user can see on the user interface.

Problem/error	Cause	What to do?
Washing machine door does not open.	Water level too high.	Drain the water using the Drain program or the Spinning program. See chapter STEP 5/ *Program chart*.
	Water temperature in the washing machine is too high.	Wait for the water temperature to drop and pump out the water. If you still cannot open the door, use the emergency door opening tool (see chapter *Errors: what to do?/Manual opening of washing machine door*).
The machine will not start.	Power supply failure.	Press the OK button to resume the program.
Washing program is not in progress.	Washing machine door is not properly closed.	Firmly press on the washing machine door until you hear two clicks when it is closed.
	There is no voltage in the power outlet.	Check if the plug is connected to the power outlet and whether there is electric current (or voltage) in the outlet.
	Delayed start function has been selected.	To cancel the delayed start function, press the OK button for three seconds.

Errors: what to do?

Problem/error	Cause	What to do?
Washing time is longer than anticipated (the time is regularly updated on the display unit).	Low inlet water temperature.	Program duration can be up to 60% longer than initially anticipated in the normal progress.
	UKS* (*unbalance system) stability system engaged due to unevenly distributed laundry.	Program time is extended due to the need to redistribute the laundry in the drum.
	Low mains voltage.	Washing machine needs more time because the power mains voltage is too low.
	Power supply failure.	Program time is extended by the duration of the power supply failure.
Display does not light up.	There is no voltage in the appliance.	Check if the plug is connected to the power outlet and whether there is electric current (or voltage) in the outlet.
The wording on the display unit is not in your language.	You have not selected your preferred language yet.	Choose the appropriate language (see System settings *Choose Language*).
Wet laundry ("unbalance" will appear on display)	A small amount of laundry will often be unevenly distributed.	Loosen and redistribute the laundry and select the Drain program or the Spinning program . Increase the amount of laundry in the washing machine and restart the program (see *STEP 7/ STEP 7: Start the wash*).
There are traces of grease (or grease rolls) on the clothes.	The laundry was very greasy.	Wash the laundry again. When your laundry is this heavily soiled, add more washing powder or use a liquid detergent in combination with a more powerful (longer) program.
There are still stains on the laundry.	You used bleach-free liquid detergent or powder detergent for coloured laundry.	Use a detergent that contains bleach.
	You selected an unsuitable program.	Use special stain removers.
There are white residues of washing powder on the laundry.	This is not due to poor rinsing by your washing machine, but rather due to phosphate-free detergents which contain ingredients (zeolites) for water softening. These ingredients may be deposited on the laundry.	Immediately rinse the laundry again. Use liquid detergents that do not contain zeolites. Try removing any residues with a brush.

Problem/error	Cause	What to do?
There is powder detergent left in the main wash compartment of the detergent compartment.	Water pressure not high enough.	Clean the net on the water supply hose.
	Some washing powders may stick strongly to the detergent compartment if it is empty.	Choose High water level or Extra rinse (see *STEP 6: Choosing the program settings*). Wipe the detergent compartment before adding the powder detergent.
There is conditioner left in the conditioner compartment of the detergent compartment.	Plug cap is not positioned correctly or it is clogged.	Make sure the plug cap in the softener compartment of the detergent compartment is positioned correctly. Clean the plug cap (see chapter *Cleaning and maintenance/ Cleaning the dispenser tray*).
Odour in the washing machine drum.	Residues of fabric, washing detergent, and conditioner in the filter.	Check if the filter is clean.
	Development of germs and bacteria.	Choose the Drum cleaning program (see STEP 5/ *Program chart*«).
Machine is moving during operation.	Feet not adjusted correctly.	Level the feet (see chapter *Installation and connection/ Adjusting the washing machine feet*).
	Transport bolts not removed.	Remove the transport bolts (see chapter *Before using the appliance for the first time/ Transport protection*).
Machine is moving during spinning.	Unevenly distributed laundry or not enough laundry.	The washing machine will automatically decrease the spin speed if vibration is too strong. Increase the amount of laundry in the washing machine and restart the program (see: *STEP 7: Start the wash*).
Noisy (loud) drain pump	Drain pump filter is clogged. Filter housing and drain pump impeller are clogged.	Make sure the drain pump filter is clean. Make sure the filter housing is clean. See chapter *Cleaning and maintenance Cleaning the filter*.

Manual opening of washing machine door

⚠ ELECTRIC SHOCK!

Washing machine door may be opened **manually** if the appliance is not connected to the power mains and if the water has been pumped out of the machine.

A. Choose the program Spinning or Drain to drain the water from the machine. If this does not work, water has to be drained from the washing machine drum manually. See chapter *Cleaning and maintenance| Cleaning the filter*.

B. Make sure the main switch is off and that the plug is disconnected from the power outlet.

C.

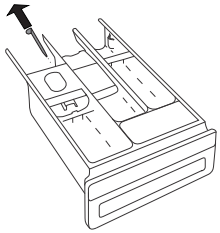

Take the emergency door opening tool (found at the back of the detergent compartment) and insert it into the emergency door release opening on the right-hand side of the washing machine door latch.

D. Press the key (key=the emergency door opening tool) downwards (all the way, until you hear a click) to unlock the washing machine door. When the door is unlocked, open it by pulling towards you.

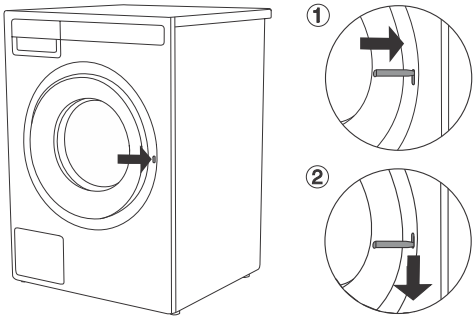

INFORMATION!

If the washing machine door still cannot be opened, call a service technician.

INFORMATION!

The door lock is motorised, which may cause noise during locking and unlocking. This is a normal condition and no cause for concern.

Failure display

In case of a failure while a programme is underway, Error (Error) X is indicated on the display unit. Press and hold the INFO button (4) to display the error description on the display unit. Switch off the dryer and turn it back on.

Errors indicated on the display unit (depending on the model) may include the following:

Error	Indication on the display unit and problem description	What to do?
E0	Incorrect settings	Restart the program. If the error reoccurs, call a service technician.
E1	Temperature sensor failure	Inlet water too cold. Repeat the washing program. If the appliance reports this error again, call a service technician.
E2	Door lock error	Make sure the washing machine door is closed. Unplug the power cord from the outlet; then, plug the power cord back into the outlet and switch on the washing machine. If the error reoccurs call a service technician.
E3	Water filling error	Check the following: • is the water inlet valve open, • is the filter on the water inlet hose clean, • is the water supply hose deformed (clipped, clogged etc.), • is the pressure in the water mains between 0.1 and 1 MPa (1–10 bar), • is the height of the drain hose is at the proper level (see chapter *Installing the drain hose*), and then press the OK button to resume the program. If the error reoccurs call a service technician
E6	Water heating error	Restart the program. If the error reoccurs, call a service technician.
E7	Water draining error	Check the following: • is the pump filter clean, • is the drain hose clogged, • is the drain clogged, • if the drain hose is placed below the maximum and above the minimum height (see chapter *Installation and connection*/ Connecting the water drain hose), • if you have used too much detergent (a larger amount of foam may form in the drum), • and remove any objects and debris from the filter housing and rotor. then, press the Exit button again. If the error reoccurs, call a service technician.

Error	Indication on the display unit and problem description	What to do?
E7.1	Water drain system alert	Alert about reduced water flow in the pumping stage. Check how to clean the pump filter (see chapter *Cleaning and maintenance/ Cleaning the filter*).
E7.2	Excessive amount of detergent	Too much detergent may cause excessive foaming in the drum.
E9 **E9.1**	Water leak detected in the washing machine area	Turn off the washing machine and turn it back on. Inspect the exterior of the appliance. If you do not observe any leaks, you can continue to use the washing machine.
		Close the water valve and see chapter *Installation and connection/ Connecting the water drain hose*or call a service center.
E10 **E10.1**	Water level sensor error	Unplug the power cord from the outlet; then, plug the power cord back into the outlet and switch on the washing machine. Vent the appliance. Do this by draining and cleaning the washing machine filter and cleaning the wall-mounted trap. If the error reoccurs call a service technician.
E11	Overflow	If there is water in the drum that exceeds a certain level, and an error is reported on the display unit, the washing program will be interrupted and water will be pumped out of the washing machine. Restart the programme. If the error reoccurs, call a service technician. If there is water in the drum that exceeds a certain level, and an error is reported on the display unit, while the washing machine continues to add water, close the water tap and call a service technician.
E12	Motor error / motor control error	Restart the program. If the error reoccurs, call a service technician.
E13	Unevenly distributed laundry	Imbalance detected. Manually redistribute the laundry (stuck or tangled laundry) and repeat the washing program. If the error reoccurs, call a service center.
E22 **E22.1**	Error while locking the door	Door is closed, but it cannot be locked. Switch off the washing machine. Switch it back on and restart the washing program. If the error reoccurs call a service technician.
E23 **E23.1**	Error while unlocking the door	Door is closed, but it cannot be unlocked. Turn off the washing machine, then turn it back on. If the error reoccurs, call a service center. To open the door, see chapter *STEP 7: Start the wash.*
E24	Error while unlocking the door	Door lock error. Restart the appliance; if the error reoccurs, call a service center.

Error	Indication on the display unit and problem description	What to do?
E26	Error while locking the door	Exceeded locking current. Restart the appliance; if the error reoccurs, call a service center.
E36	Communication UI and PMCU Error in UI** and PMCU communication.	Turn off the appliance and turn it back on. If the error reoccurs, call a service technician.
E37	PMCU/UI** software versions are not compatible	Call a service technician.
E40	Warning from the system for detecting extended washing machine voltage fluctuation – 180 V > U > 260 V	A prolonged drop of voltage do below 180 V, or voltage in excess of 260 V was detected, which can affect the washing machine operation. Check the power supply network to which your washing machine is connected.
E48	Appliance cannot be connected to the network.	The error only affects the option to remotely control (Remote control) your washing programme. it does not affect the washing process on other programmes. Call a service technician.
	Warning - Drum cleaning program	• clean the dosing container, • clean the water supply hose, detergent dispenser, and rubber door gasket, • clean the pump filter (see chapter *Cleaning the filter*) and • run the cleaning program (Drum cleaning) (see chapter *Program chart*). This programme is used for cleaning the drum and removing the residue of detergent and bacteria. To select the programme, rotate the program selector knob to the left or to the right to the Drum clean (Cleaning programme) position. Other extra functions cannot be selected. The drum must be empty. **Do not add detergent or softener!** You can add some spirit vinegar (approx. 2 dl) or sodium bicarbonate (1 tablespoon or 15 g) for effective descaling. We recommend that you use the program at least once a month or whenever the warning appears.
	Preparation for unlocking the door.	Wait for the process to finish. If no errors are shown after the process, a new cycle can be run.

** UI = (User Interface)

Unevenly distributed laundry or lumps of laundry in the washing machine drum can cause problems such as vibration and noisy operation. The washing machine detects such problems and the UKS* (*stability control system) will be activated.

Smaller loads (e.g. one towel, one sweater, one bathrobe etc.) or clothes made of materials with special geometrical properties are virtually impossible to distribute evenly across the washing machine drum (slippers, large items etc.). This results in several attempts to redistribute the laundry, which in turn leads to longer programme duration. In extreme cases of unfavourable conditions, the programme can be completed without the spinning cycle.
The UKS* (*stability control system) allows stable operation and a longer washing machine useful life.

If the problems persist despite observing the advice above, call an authorized service technician.

INFORMATION!

Noise and vibration – make sure the appliance is levelled using the adjustable legs and that the jam nuts are securely tightened.

INFORMATION!

The warranty does not cover consumables, minor deviations in colour, increased noise that results from appliance age and which does not affect the functionality of the appliance, and aesthetic defects on components, which do not affect the functionality and safety of the appliance.

INFORMATION!

The warranty does not cover the errors or failures resulting from disturbances from the environment (lightning strike, power grid failures, natural disasters etc.).

Before calling a service center

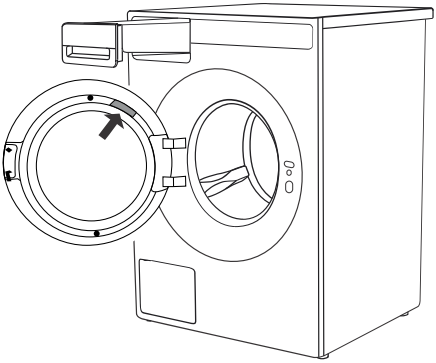

See chapters *Cleaning the filter*, and *Errors: what to do?* and see if you can resolve the problem yourself.

When you contact a service centre, please state your model number (2) and type (1) and the serial number (3) of the washing machine.

Model, type, and serial number are indicated on the rating (type) plate located on the interior side of the washing machine door.

The QR and AUID codes are also located on the rating plate.

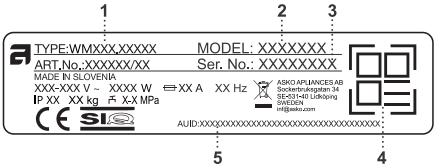

1 - Model type

2 - Model

3 - Serial number

4 - QR code

5 - AUID code

INFORMATION!

Report any malfunction to your local call centre or web address; all information can be found in the enclosed warranty statement. Contact details of your authorised service centre are available in the warranty statement supplied with the appliance and on the website by scanning the QR code on the rating plate (see chapter *Before calling a service center*).

INFORMATION!

Some simple faults described in the chapter *Errors: what to do?* can be fixed by the user himself by taking into account the instructions without risk to their own safety and without affecting the warranty conditions.

WARNING!

In case of a failure, only use approved spare parts by authorized manufacturers.

WARNING!

Repair or any warranty claim resulting from incorrect connection or use of the washing machine shall not be covered by the warranty. In such cases, the costs of repair shall be charged to the user.

INFORMATION!

Functional spare parts for the ASKO washing machine you purchased will be available for 15 years. During this time, original spare parts will be available to ensure the correct operation of your appliance.

A list of spare parts and repair tips in accordance with the current Ecodesign Directive can be found by scanning the QR code located on the inside of the door of the washing machine.

Or on the following link: https://auid.connectlife.io

PRODUCT INFORMATION SHEET according to EU-Regulation no. 2019/2014

Supplier's name or trade mark:					
Supplier's adress ([b]):					
Model identifier:					
General product parameters:					
Parameter	Value		Parameter	Value	
Rated capacity ([a]) (kg)	x,x		Dimensions in cm	Height	x
				Width	x
				Depth	x
EEI_W ([a])	x,x		Energy efficiency class ([a])	[A/B/C/D/E/F/G] ([c])	
Washing efficiency index ([a])	x,xxx		Rinsing effectiveness (g/kg) ([a])	x,x	
Energy consumption in kWh per cycle, for the 'eco 40-60' programme. Actual energy consumption will depend on how the appliance is used.	x,xxx		Water consumption in litre per cycle, based on the 'eco 40-60' programme. Actual water consumption will depend on how the appliance is used and on the hardness of the water.	x	
Maximum temperature inside the treated textile ([a]) (°C)	Rated capacity	x	Remaining moisture content ([a]) (%)	x,x	
	Half	x			
	Quarter	x			
Spin speed ([a]) (rpm)	Rated capacity	x	Spin-drying efficiency class ([a])	[A/B/C/D/E/F/G] ([c])	
	Half	x			
	Quarter	x			
Programme duration ([a]) (h:min)	Rated capacity	x:xx	Type	[built-in/ free standing]	
	Half	x:xx			
	Quarter	x:xx			
Airborne acoustical noise emissions in the spinning phase ([a]) (dB(A) re 1 pW)	x		Airborne acoustical noise emissions class ([a]) (spinning phase)	[A/B/C/D] ([c])	
Off-mode (W)	x,xx		Standby mode (W)	x,xx	

Delay start (W) (if applicable)	x,xx	Networked standby (W) (if applicable)	x,xx
Minimum duration of the guarantee offered by the supplier ([b]):			
This product has been designed to release silver ions during the washing cycle		[YES/NO]	

Weblink to the supplier's website, where the information from point 9 Anex II to Commition Regulation (EU) 2019/2023 ([a]) ([b]) is found:

([a]) For the »eco 40-60« programme.

([b]) Changes to these items shall not be considered relevant for the purposes of paragraph 4 of Article 4 of Regulation (EU) 2017/1369.

([c]) If the product database automatically generates the definitive content of this cell the supplier shall not enter these data.

Link to the EU EPREL database

From 1 March 2021, information on energy labelling and ecodesign requirements is available in the EU EPREL product database.

The QR code on the energy label supplied with the appliance contains a web link through which you can find your registered appliance in the EU EPREL database.
Information regarding the performance of the product can also be found in the EU EPREL database, which is accessible via the link https://eprel.ec.europa.eu, where you have to enter the model and product number; both are indicated on the rating plate on the appliance. On the website www.theenergylabel.eu you can find more detailed information about the energy label.

Keep the energy label in case it is needed in the future, together with the user manual and other documents supplied with this appliance.

Technical data

Height	850 mm
Width	595 mm
Depth	585 mm
Drum volume	60 l
Rated power	See rating plate
Heater power	See rating plate
Water pressure	0,1–1 MPa 1–10 kp/cm^2 10–100 N/cm^2
Material for the drum and dispenser	Stainless steel
Housing material	Hot-dip galvanized and powder coated sheet metal, or stainless steel sheet (depending on model)
Water connection	1,5 m, reinforced rubber hose
Drain hose	1.6 m polypropylene hose

Typeface License Notice

This product includes the Noto Sans font, which is licensed under the SIL Open Font License, Version 1.1.

The full text of the license is available at: https://openfontlicense.org

Noto Sans is an open-source typeface developed by Google, and it may be used, modified, and redistributed under the terms of the SIL Open Font License.

Radio equipment type

(depending on the model)	HL3215STG HLW3215-TG HLW3215-TG01
Wi-Fi	
Operating frequency range	2.4000 GHz – 2.4835 GHz
Maximum output power	≤10 dBm/MHz (EIRP) (Antenna gain <10 dBi)
Maximum antenna gain	Gain: 0 dBi
Bluetooth	
Operating frequency range	2.400 GHz – 2.4835 GHz
Carrier output	6 dBm (≤ 10 dBm)
Emission type	F1D

Declaration of conformity

The company declares that the device with the function ConnectLife complies with the essential requirements and other relevant provisions of Directive 2014/53/EU. The detailed Declaration of Conformity can be found at the web address https://auid.connectlife.io on the page of your device among the additional documents.

INFORMATION!

The provided information is in accordance with EU Regulation 2019/2023. The values indicated for programmes other than Eco 40-60 have been determined in accordance with the applicable standard EN60456.

Program		Capacity (kg)	Programme duration (h:min)[1]	Energy consumption (kWh/cycle)[1]	Water consumption (l/cycle)[1]	Maximum temperature (°C) 5 minute[1]	Residual moisture content (%)[1]	Spin Speed (rpm)[1]	Energy class	Drum volume
i	**Eco 40-60** [2]	9 [FL]	03:31	0,730	62	32	48	1400	A	60L
		4,5	02:41	0,220	26	22				
		2,5	02:12	0,180	19	23				

i Eco 40-60 program at the rated capacity, half of the rated capacity, and a quarter of the rated capacity

1 Due to the influence of water pressure, hardness, and inlet temperature, the type, quantity, and soiling of the laundry, the detergent used, power supply, and selected functions, the actual values may differ from the specified values.

2 Test program with cold water (15°C) in accordance with the EU Directive on Eco-design and the EU Regulation on Energy Labeling.

FL Full load

Program		Temperature (°C)	Capacity (kg)	Programme duration (h:min)[1]	Energy consumption (kWh/cycle)[1]	Water consumption (l/cycle)[1]	Residual moisture content (%)[1]	Spin speed - default LCD (rpm)[1]
ii	**Cotton**	**20**	9 [FL]	02:39	0,36	75	54	1400
	Cotton	**40**	9 [FL]	04:03	1,16	76	54	1400
iii	**Cotton**	**60**	9 [FL]	03:06	1,67	79	54	1400
iv	**Mix/Synthetics**	**30**	4	02:33	0,51	41	33	1200
v	**Time program**	**30**	2	00:45	0,22	21	65	1400
vi	**Cotton**	**90**	9 [FL]	03:07	2,58	82	54	1400

ii The 20°C program at the rated capacity for this program
iii One cotton program at the nominal temperature of 60°C or higher, at the nominal capacity for this program
iv One program for textiles other than cotton or a textile blend, at the nominal capacity for this program
v One program for quick washing of lightly soiled laundry, at the nominal capacity for this program
vi One program for heavily soiled textiles, at the nominal capacity for this program
[1] Due to the influence of water pressure, hardness, and inlet temperature, the type, quantity, and soiling of the laundry, the detergent used, power supply, and selected functions, the actual values may differ from the specified values.
[FL] Full load

Adjustment of the displayed washing time

Advanced technology allows the appliance to sense the amount of laundry and add the required amount of water during the washing process. Depending on the washing load, washing time can be longer or shorter and the time displayed will be adjusted accordingly.

Moreover, displayed washing time may change due to differences in inlet water temperature. At low inlet water temperatures, washing time can be longer; at higher temperatures, it can be shorter.

Unevenly distributed laundry or lumps of laundry in the washing machine drum can cause problems such as vibration and noisy operation. The appliance can sense such lumps and will try to redistribute the laundry. Smaller loads (e.g. one towel, one sweater, one bathrobe etc.) or clothes made of materials with special geometrical properties are virtually impossible to distribute evenly across the washing machine drum (slippers, large items etc.). This results in several attempts to redistribute the laundry, which in turn leads to longer program duration.

			Washing mode					Options						
	Program	Default (T°C)	Default - Normal	(Eco) Green mode	Speed mode	Night mode	Intensive mode	Small load	Prewash	Super rinse	High water level	Rinse and hold	Anti-crease	Start delay
	Eco 40-60		✓									✓	✓	✓
	Cotton	**20**	✓	✓	✓	✓	✓	✓	✓	✓	✓	✓	✓	✓
	Cotton	**40**	✓	✓	✓	✓	✓	✓	✓	✓	✓	✓	✓	✓
iii	**Cotton**	**60**	✓	✓	✓	✓	✓	✓	✓	✓	✓	✓	✓	✓
vi	**Cotton**	**90**	✓	✓	✓	✓	✓	✓	✓	✓	✓	✓	✓	✓
	Mix/Synthetics	**30**	✓	✓	✓	✓		✓	✓	✓	✓	✓	✓	✓
	White laundry	**40**	✓	✓	✓	✓	✓	✓	✓	✓	✓	✓	✓	✓
	Coloured laundry	**40**	✓	✓	✓	✓	✓	✓	✓	✓	✓	✓	✓	✓
	Wool/Hand wash	**30**	✓		✓					✓	✓	✓	✓	✓
	Delicates	**40**	✓							✓	✓	✓	✓	✓
	Sportswear	**40**	✓		✓			✓	✓	✓	✓	✓	✓	✓
	Outerwear	**30**	✓		✓			✓	✓	✓	✓	✓	✓	✓
	Time program	**30**	✓									✓	✓	✓
	Steam Refresh		✓											✓
	Rinse		✓								✓	✓	✓	✓
	Spinning		✓										✓	✓
	Drain		✓											✓
	Drum Cleaning		✓											✓

✓ Choice of options

iii One cotton program at the nominal temperature of 60°C or higher, at the nominal capacity for this program

vi One program for heavily soiled textiles, at the nominal capacity for this program

DISPOSAL

Packaging is made of environmentally friendly materials that can be recycled, disposed of, or destroyed without any hazard to the environment. To this end, packaging materials are labelled appropriately.

The symbol on the product or its packaging indicates that the product should not be treated as normal household waste. Take the product to an authorized collection centre for waste electric and electronic equipment processing.

When **disposing** of the appliance at the end of its useful life, remove all power cords, and destroy the door latch and switch to prevent the door from locking or latching (child safety).

Correct **disposal** of the product will help prevent any negative effects on the environment and health of people, which could occur in case of incorrect product removal. For detailed information on removal and processing of the product, please contact the relevant municipal body in charge of waste management, your waste disposal service, or the store where you bought the product.

ASKO

Inspired by Scandinavia

www.asko.com

939093-a2

CE

We reserve the right to make changes.