Step 3

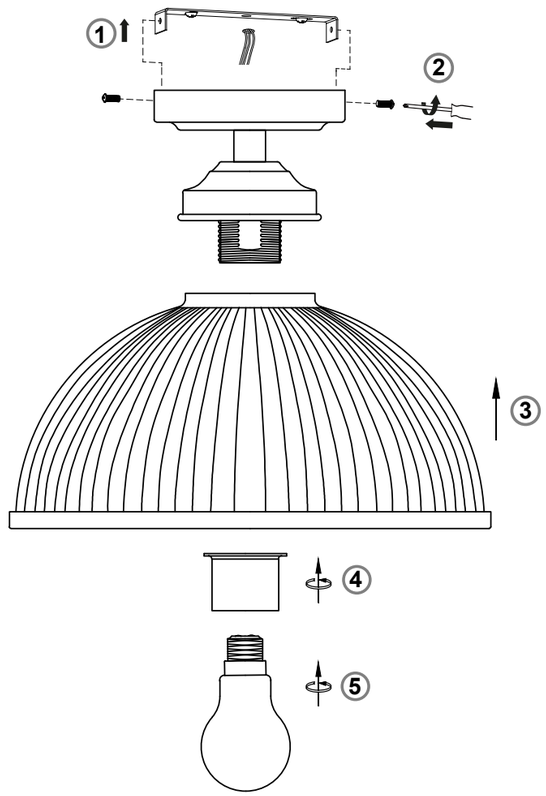

Maintenance

This fitting is designed for indoor use only and must be fitted to a DRY SURFACE as any dampness in plaster or paint can damage the finish. **Do not use polish or abrasive cleaner - just a soft dry cloth.**

BULB REPLACEMENT

1. Switch off the mains power supply.
2. Before replacing the bulb, allow it to cool down for at least 10 minutes.
3. Never touch the bulb with your fingers directly, cover it with a cloth.
4. Loosen the bulb and remove it from the lamp.
5. Replace a new bulb with same voltage and wattage **(Max.13W LED E27).**

Recycling electrical products

You should now recycle your waste electrical goods and in doing so help the environment. This symbol means an electrical product should not be disposed of with normal household waste. Please ensure it is taken to a suitable facility for disposal.
Visit www.recycle-more.co.uk, click on “bank locator” and enter your postcode to find your nearest recycling site.

If you require any further assistance, you can contact us on **0345 640 2020** or visit **habitat.co.uk/help/contact-us**

Made in China
Habitat, Argos Limited, London, EC1M 6HA, UK.
Argos (N.I.) Ltd, Forestside Shopping Centre, Upper Galwally, Belfast, BT8 6FX, UK.

habitat

Habitat Pressed Glass Flush

SKU 9628672

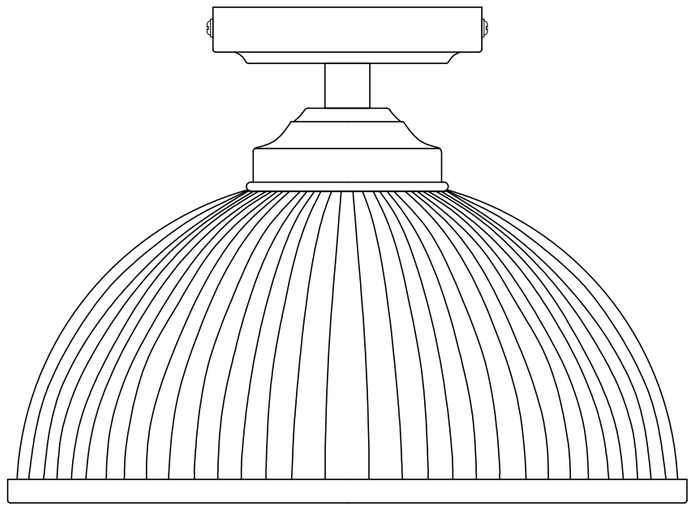

Care & Instruction Manual

For household and indoor use only

Please read and retain these instructions for future reference

Important

- For your safety, this product must be installed in accordance with local Building Regulations.
- If in any doubt, or where required by the law, consult a competent person who is registered with an electrical self-certification scheme. Further information is available online or from your Local Authority.
- To prevent electrocution, switch off at the mains supply before installing or maintaining this fitting. Ensure other persons cannot restore the electricity supply without your knowledge.
- To avoid damage to concealed wiring during installation, establish the direction of the supply cable before drilling fixing holes.
- Always be sure to use the correct type and wattage of bulbs as indicated on the fitting. Never exceed the wattage stated.
- When changing the bulb, always switch off at the mains and allow the old bulb to cool down before handling. Dispose of used bulbs carefully.
- This fitting is Class I appliance. It should be fitted to a lighting supply (with earth) protected by a 5 amp fuse or equivalent breaker. The product must be earthed.
- The luminaire is designed for indoor use only.

Instructions for use

Before removing the existing fitting, carefully note the position of each set of cables. If there are loop in cables that are not connected to the light, they must be terminated in a separate terminal block not connected to the fitting.

1. Remove the mounting bracket from the fitting by removing the 2 screws. Then, using the bracket as a template, mark and drill fixing holes in the ceiling. Ensure the holes are drilled into a joist or other suitable mounting surface and not just into plaster.
2. Attach mounting bracket to the ceiling using suitable fixings.
3. The weight of the fitting must be supported whilst making the electrical connections as follows:
   a. Connect supply live (normally brown or red) to fitting live (marked “L”) on the terminal block.
   b. Connect supply neutral (normally blue or black) to fitting neutral (marked “N”) on the terminal block.
   c. Connect supply earth (normally green/yellow or unsheathed) to earth (marked “⏚”) on terminal block.
   NOTE: Ensure electrical connections are tight and no loose strands of wire are left out of the terminal block.
4. Offer fitting up onto the bracket and push any excess cable into ceiling void. Secure the ceiling cup into position using the 2 screws removed earlier. Take care not to trap or damage wiring.
5. Remove the shade ring from the lampholder, then attach the shade to the lampholder and secure in place with the shade ring.
6. Fit the bulb: Type and wattage as indicated on the fitting. The wattage indicated must not be exceeded.
7. Switch on the electricity supply at the fuse board.

Step 1

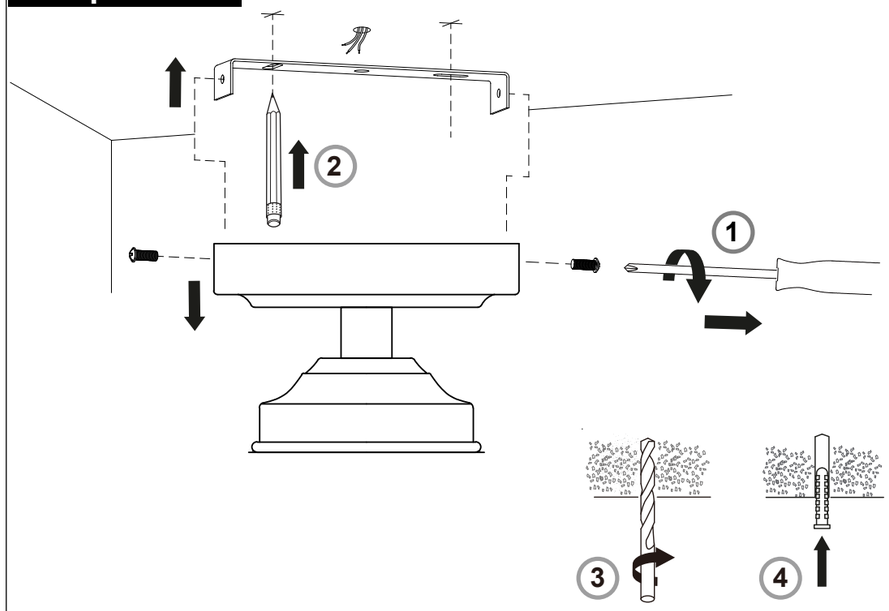

Step 2

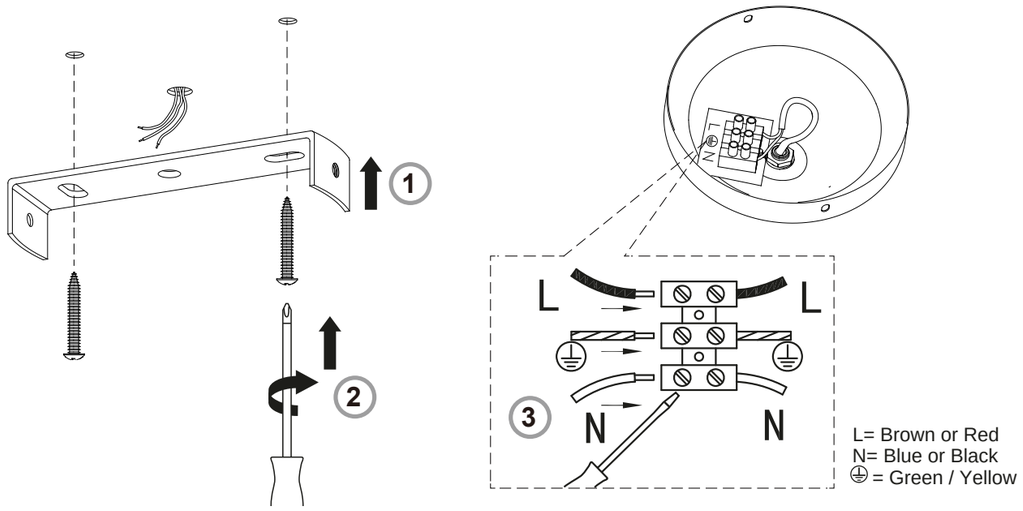

A Guide to

Wall Mounting & Fixings

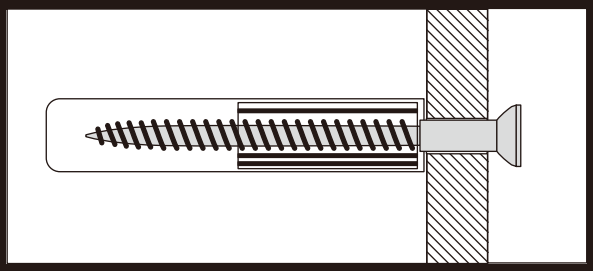

IMPORTANT:

When drilling into walls always check that there are no hidden wires or pipes etc. Make sure that the screws and wall plugs being used are suitable for supporting your unit. Consult a qualified tradesperson if you are unsure.

HINTS:

1) General Rule ⚠ Always use a larger screw and wall plug if you are not sure.
2) Ensure you use the recommended drill bit to match the wall plug and hole size.
3) Ensure you drill the hole horizontally, do not force the drill or enlarge the hole.
4) Take extra care when drilling high walls, ceilings and ceramic tiles. Ensure the plug is fitting below the ceramic tile to avoid splitting or cracking.
5) Ensure wall plugs are well fitted and are a tight fit in the drilled hole.

Types Of Walls

You can use one of the following types of wall plug if your walls are made of brick, breeze block, concrete, stone, wood or plaster board.

No.1 "Standard" Wall Plug General Wall Materials

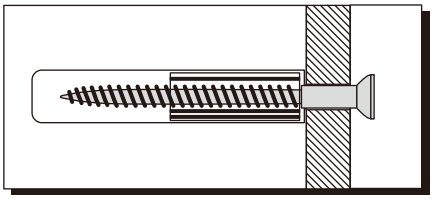

These come in various sizes and are made from plastic or sometimes wood fiber.

No.2 "General Purpose" Wall Plug Aerated / Breeze Block

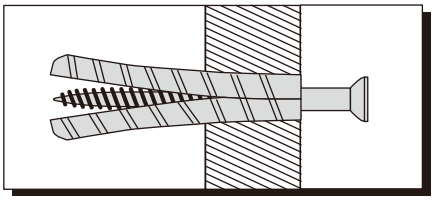

Generally aerated blocks should not be used to support heavy loads, use a specialist fitting in this case.
For light loads, a General Purpose Plug can be used.

No.3 "Shield Anchor" Wall Plug Heavy Loads

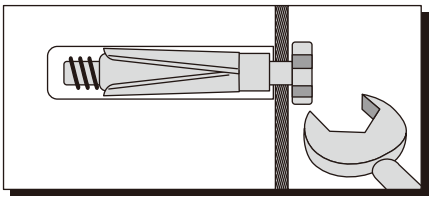

For use with heavier loads such as TV & HiFi Speakers and Satellite Dishes etc.

No.4 "Cavity Fixing" Wall Plug

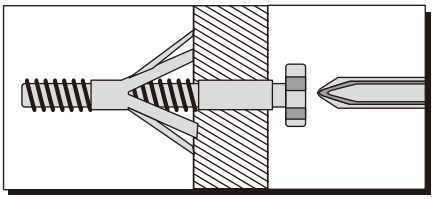

For use with plaster board partitions or hollow wooden doors.

No.5 "Cavity Fixing - Heavy Duty" Wall Plug

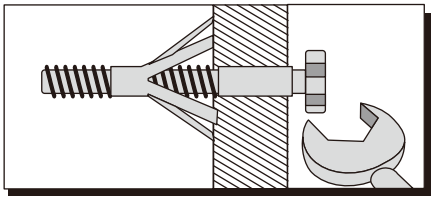

For use when fitting or supporting heavy loads such as shelving, wall cabinets, coat racks.

No.6 "Hammer Fixing" Wall Plug

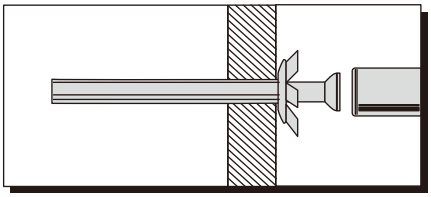

For use with walls stuck with plaster board. The hammer fixing allows it to be fixed to the wall rather than the plaster board. Always check the fixing is secure to the retaining wall.

CARE & MAINTENANCE

⚠ **SAFETY**

Always check the fitting and location to ensure your safety in and around the home.

⚠ **FITTING**

From time to time check the fitting to ensure the wall plugs or screws do not become loose.