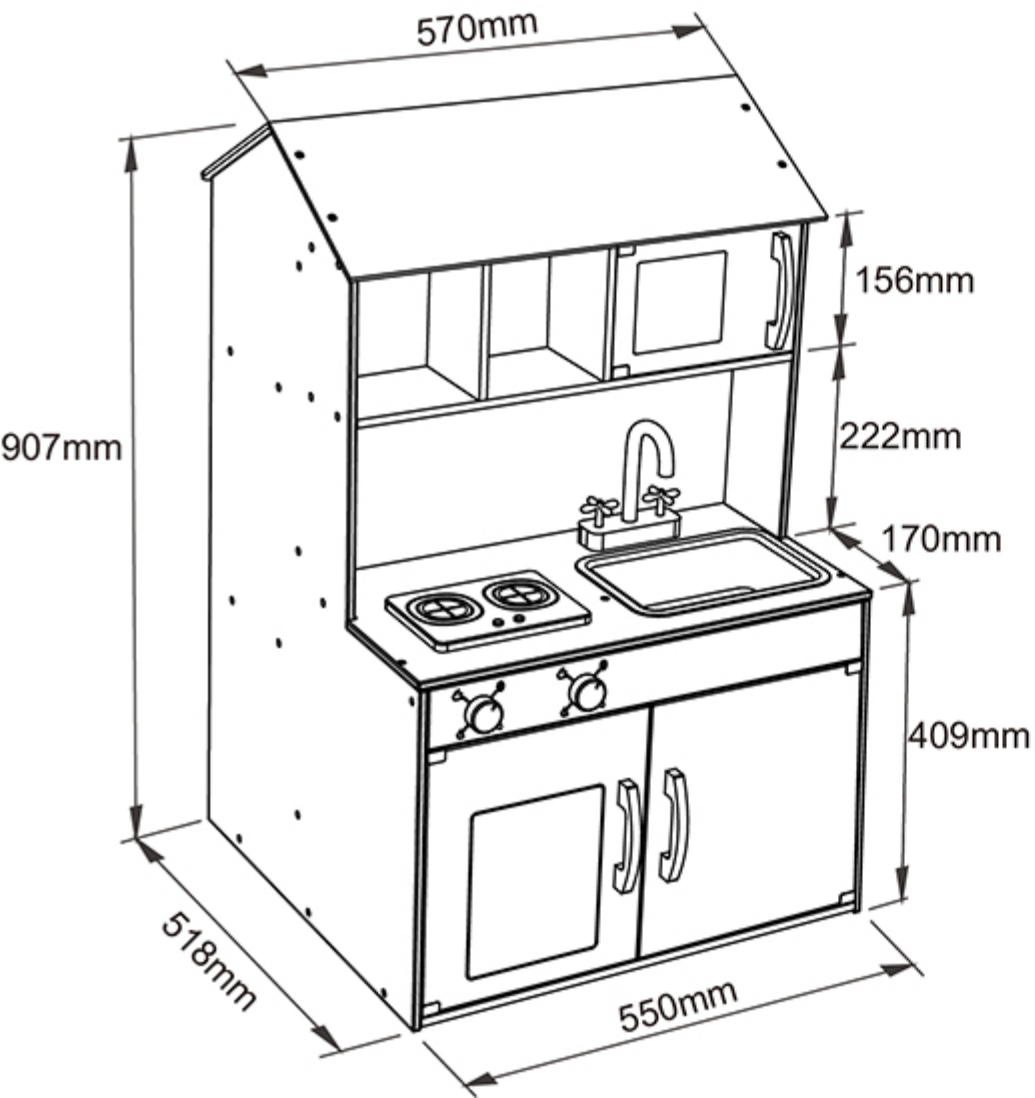
570mm
156mm
222mm
170mm
907mm
409mm
518mm
550mm

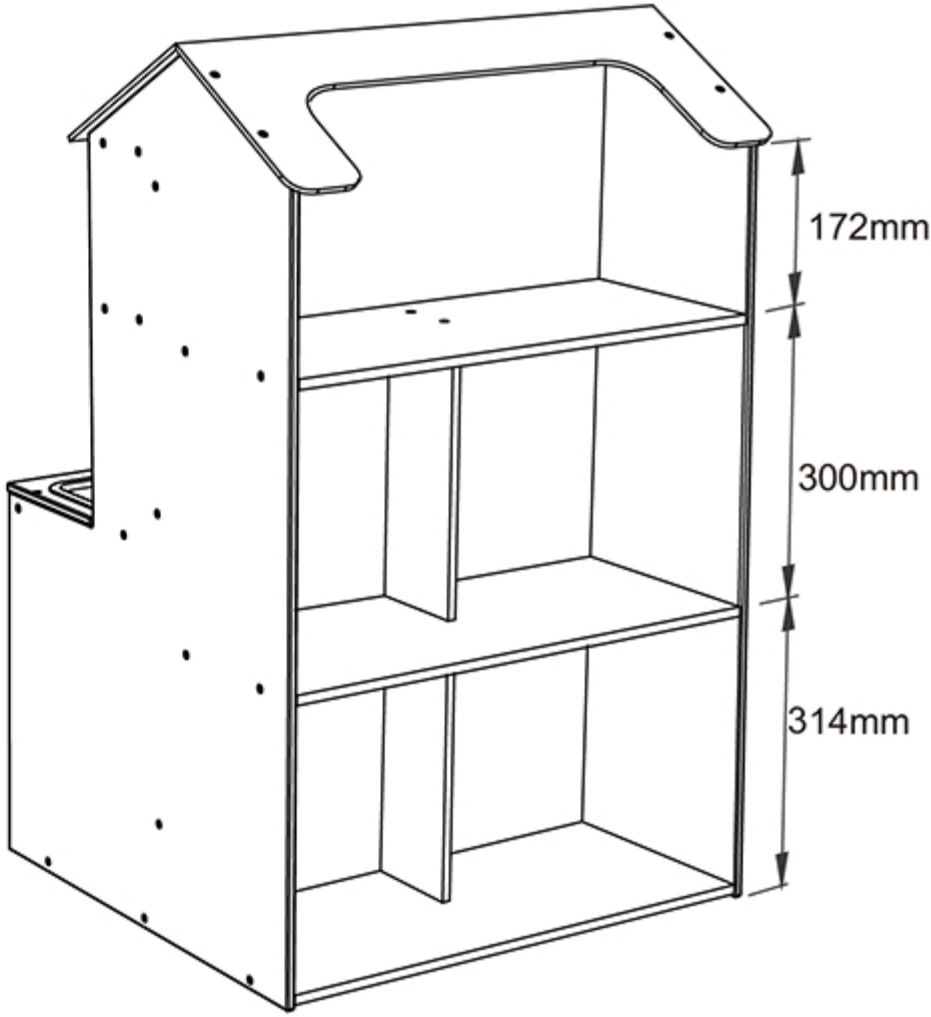
172mm
300mm
314mm