instructions

23L Microwave Oven

AC9P022DT-S00F

Please read and retain these instructions for future reference

DeLonghi

CONTENTS

Safety Information 3
Installation 5
Parts and assembly 6
Control panel 7
Setting the clock 8
To stop cooking process or cancel settings 8
Child lock 9
Kitchen timer 9
Selecting microwave power level 10
Selecting grill, combination or convection cooking modes 10
Express microwave mode 11
Microwave cooking 11
Defrosting 13
Grill cooking 14
Combination cooking 15
Convection cooking 16
Multistage cooking 17
Auto menu function 18
Cleaning your oven 21
Materials suitable for use in the oven 21
General microwave cooking advice 22
Troubleshooting 23
Technical Specification 24
Recycling electrical products 24
Plug rewiring 25
Guarantee 26

ELECTRICAL AND MICROWAVE SAFETY

- **WARNING**: It is hazardous for anyone other than a competent person to carry out any service or repair operation that involves the removal of a cover that gives protection against exposure to microwave energy. Servicing of this appliance must only be carried out by a qualified electrician.
- **WARNING**: If the door or door seals are damaged, the oven must not be operated until it has been repaired by a competent person. Do not operate this appliance if damaged or modified in any way.
- Keep the appliance and its cord out of reach of children less than 8 years.
- This appliance can be used by children aged from 8 years and above and persons with reduced physical, sensory or mental capabilities or lack of experience and knowledge if they have been given supervision or instruction concerning use of the appliance in a safe way and understand the hazards involved. Children shall not play with the appliance. Cleaning and user maintenance shall not be made by children unless they are aged from 8 years and above and supervised.
- Switch off and unplug before cleaning or servicing the appliance.
- Keep microwave, cable and plug dry and away from areas where it is likely to get splashed. Never immerse in water. Never clean with a steam cleaner.
- Do not pull on the cable to disconnect from the mains supply.
- This oven must be positioned so that the plug is accessible and the plug socket is within easy reach of the power cord.
- Do not operate the microwave if damaged or after it malfunctions. In the event the supply cord is damaged, it must only be replaced by a qualified service engineer, with a suitably approved part.
- Do not place items with naked flames or containers with liquids on this appliance.
- The mains plug shall be connected into a mains socket outlet with a protective earth connection.
- All microwaves are tested and approved in accordance with current electromagnetic safety and compatibility regulations and standards. As a precautionary measure, pacemaker manufacturers recommend wearers to keep a minimum distance of 20-30 cm between an operating microwave oven and the pacemaker in order to avoid possible interference with the pacemaker. If you suspect there may be interference, turn the microwave off immediately and contact the manufacturer of the pacemaker.

WARNING!

- This appliance is not intended to be used in: staff kitchen areas in shops, offices and other working environments; farm houses; by clients in hotels, motels and other residential type environments; bed and breakfast type environments.
- This appliance must not be operated by a timer or a separate remote control system.
- **WARNING:** Liquids and other foods must not be heated in sealed containers since they are liable to explode.
- Microwave heating of beverages can result in delayed eruptive boiling; therefore care must be taken when handling the container.
- If you are preparing food or liquid for a baby stir or shake the contents and check the temperature before consumption in order to avoidburns.
- Never cook or heat eggs in their shell or whole hard boiled eggs, as they may explode even after cooking in the microwave has been completed.
- The oven should be cleaned regularly and any food deposits removed – see page 21 for details. Failure to maintain the oven and seals in a clean condition could lead to deterioration of the surface or seals, adversely affect the life of the oven and possibly result in a hazardous situation.
- Never operate the oven when empty and avoid leaving unattended during use.
- Do not cover and allow adequate ventilation – see page 5 for clearance required.
- The surfaces of the oven and the containers inside will become hot during and immediately after use; wear oven gloves when handling.
- Check regularly during cooking cycle especially when using plastic or paper containers to ensure food and containers do not ignite.
- If smoke is emitted, switch off and unplug the appliance and keep the door closed in order to stifle any flames.
- Do not use oven on, near or under flammable or heat sensitive items.
- Do not place foil wrapped food, metal containers or containers with metal parts or trim when using the microwave oven.
- Do not use with a cracked or missing turntable or without the turntable ring.
- The microwave oven is intended for heating food and beverages. Drying of clothing and heating of warming pads, slippers, sponges, damp cloth and similar may lead to risk of injury, ignition or fire.
- Always check for container and utensil suitability before using in the microwave oven - see page 21 for advice.

FOOD SAFETY

- Do not cook raw meat or raw shellfish in a microwave, due to the possibility for uneven heating.
- Do not use microwave for home canning or bottling. Improperly canned or bottled foods may spoil and be dangerous to eat.
- **Always check the temperature of food before serving.**
- Food cooking times will vary with microwave wattage (MAFF rating). When following recipes and on pack cooking instructions always check the MAFF rating / wattage of the appliance being used (marked on the front of the microwave) and follow the corresponding cooking advice.

INSTALLATION

- This microwave is designed to be free standing and is not intended to be used 'built in' or in a cabinet.
- Select a level surface away from televisions, cookers and other heat producing appliances.
- Ensure adequate ventilation and allow a clearance of
  - 20cm at each side of the oven
  - 30cm clearance above the oven
  - 0cm at the rear of the oven
  - The minimum installation height is 85cm
- Ensure that the cable is not close to any sharp or hot surfaces and or where it is likely to cause a trip hazard.

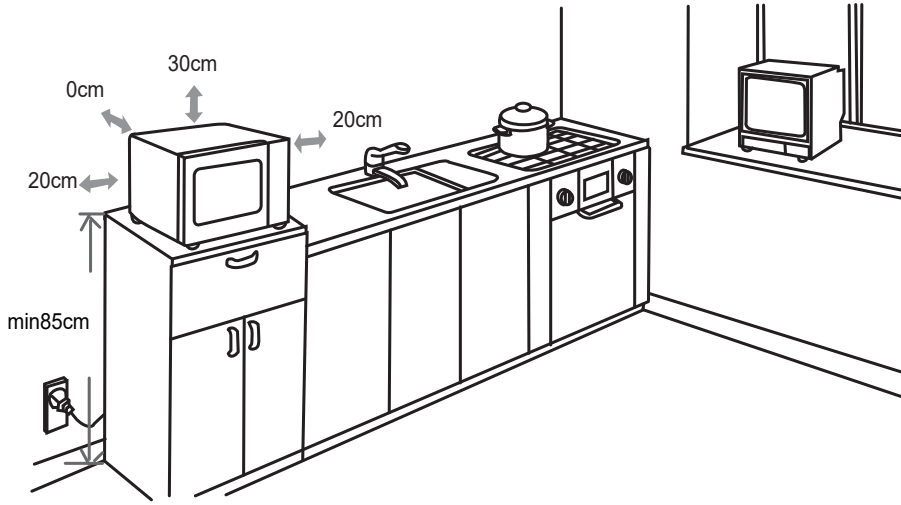

PARTS & ASSEMBLY

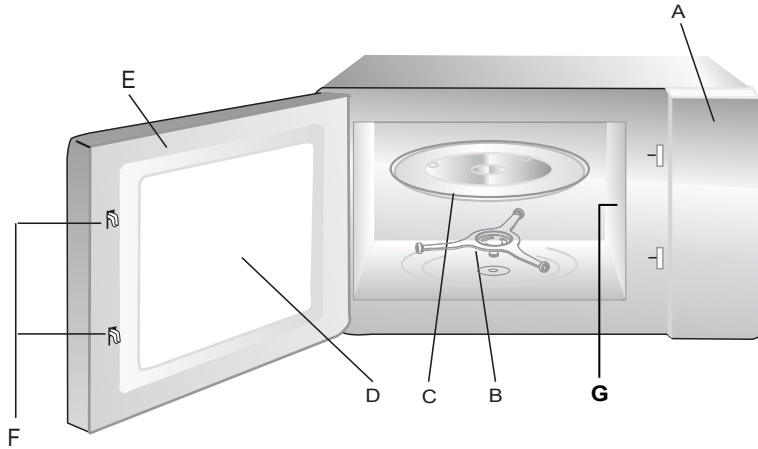

A. Control panel
B. Turntable roller
C. Glass turntable
D. Door with viewing panel
E. Seal
F. Interlocking catches
G. Waveguide cover

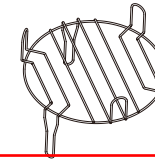

Grill Rack (Note: Do not use in microwave function and must be placed on the glass turntable)

- Ensure all packaging materials, protective film and adhesive tape are removed and check the oven and door for any damage. Do not remove the waveguide cover.
- Assemble as shown above and ensure that the glass turntable is correctly positioned on the roller.
- When using in microwave only mode do not fit the grill rack.
- When using the grill, place the grill rack onto the glass turntable.
- When using the combination and convection modes the grill rack may be used as required.

CONTROL PANEL

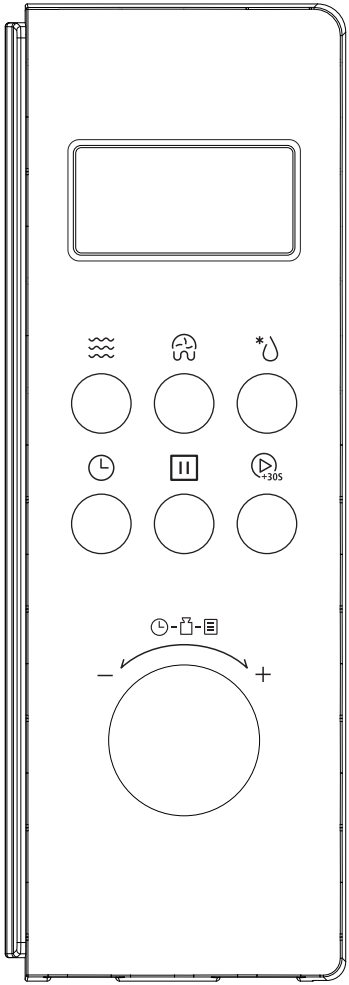

Display symbol	Description
	Microwave
	Grill
	Convection
	Defrost
Auto	Auto Menu
	Keypad Locked

Button symbol	Description
	Microwave
	Grill / Combi/ Convection
	Defrost
	Clock / Kitchen Timer
	Stop / Clear
+30S	Start / +30SEC / Confirm

Knob symbol	Description
	Time
	Weight
	Auto Menu

DISPLAY – TEMPERATURE BAR	
When used in convection mode a temperature bar will be visible in the display. The number of squares illuminated in the bar indicates the temperature of the oven.	110 ˚C 150 ˚C 200 ˚C

SETTING THE CLOCK

1. Fully unwind the cable, plug in and switch on. The microwave will emit a single bleep and the display will show 0:00.
2. Press CLOCK/KITCHEN TIMER (◷) button twice, the hour digit will flash and turn the FUNCTION knob until the correct hour is displayed.
3. Press CLOCK/KITCHEN TIMER (◷) button again, the minute digits will flash and turn the FUNCTION knob until the correct minute is displayed.
4. Press CLOCK/KITCHEN TIMER (◷) button again to save the setting.

Notes:

- It is a 24-hour clock.
- In the process of clock setting, if the STOP/CLEAR (II) button is pressed or if there is no operation within 1 minute, the oven will go back to the former setting automatically.
- If the oven is unplugged or turned off at the mains the clock setting will be lost.
- To check the time during oven operation, press the CLOCK/KITCHEN TIMER (◷) button and the time will display briefly before returning to the countdown timer.
- To switch off the display, press the STOP/CLEAR (II) button once when the oven is in standby mode. To resume the display, press any key.

TO STOP COOKING PROCESS OR CANCEL SETTINGS

- The oven can be stopped at any time by pressing the STOP/CLEAR (II) button or by opening the door.
- If the oven door is OPEN, press the STOP/CLEAR (II) button ONCE to clear all settings.
- If the oven door is CLOSED, press the STOP/CLEAR (II) button TWICE to clear all settings.

CHILD LOCK

This function helps prevent accidental operation during cleaning or unsupervised operation of the oven by children.

To activate the lock	press **and hold** the STOP/CLEAR ( ) button (approx. 3 seconds), until the locked icon ( ) is displayed and a single long bleep is heard.
To deactivate the lock	press **and hold** the STOP/CLEAR ( ) button until a single long bleep is heard (approx. 3 seconds) and the locked icon ( ) is no longer visible.

KITCHEN TIMER

The clock can be used to set a countdown timer.

1. Press CLOCK/KITCHEN TIMER ( ) button once, the display will show 00:00.
2. Turn the FUNCTION knob until the set time is displayed. (note: the maximum time is 95 minutes)
3. Press START/+30SEC/CONFIRM ( ) button to save.
4. The timer will now start to count down. When the set time has elapsed the oven will bleep five times.

Notes:

- The kitchen timer is different from clock system, it is just a timer.
- During kitchen timer mode, no programs can be set.

SELECTING MICROWAVE POWER LEVEL

The default on the microwave oven is set to cook at full power unless otherwise changed. To select a lower power setting, press the MICROWAVE ( ) button repeatedly or turn the FUNCTION knob before setting the cooking time. The power selected will be shown in the display.

POWER LEVELS	
Display	**Power (%)**
P100	100 (Full)
P80	80
P50	50
P30	30
P10	10

TIME INCREMENTS	
Cooking time	**Increments**
0 – 1 min	5 sec
1 – 5 min	10 sec
5 – 10 min	30 sec
10 – 30 min	1 min
30 – 95 min	5 min

SELECTING GRILL, COMBINATION OR CONVECTION COOKING MODES

To select grill, combination or convection cooking, either

- press the GRILL/COMBI/CONVECTION ( ) button repeatedly or alternatively
- press the GRILL/COMBI/CONVECTION ( ) button once and turn the FUNCTION knob to scroll through the options available. The power, cooking mode or temperature selected will be shown in the display.

Display	Cooking mode	Cooking mode and proportion of cooking time by each mode
G-1	Grill	Grill
C-1	Combination	Microwave cooking (48% of time) followed by 160˚C Convection (52% of time)
C-2	Combination	Microwave cooking (48% of time) followed by Grill (52% of time)
C-3	Combination	200˚C Convection cooking (100% of time) with Grill (17% of time)
C-4	Combination	Microwave cooking (28% of time), followed by Grill and 200˚C Convection simultaneously (72% of time)
110-200˚C	Convection	Convection 110 - 200˚C

EXPRESS MICROWAVE MODE

This function allows the microwave to be set quickly at set increments.

1. Place the item to be cooked in a suitable **microwave safe** container. Open the door and position the container in the centre of the glass turntable. Securely close the microwave door.
2. Press the START/+30SEC/CONFIRM ( ) button to program to cook on full power for 30 seconds. Each successive press will increase the cooking time by 30 seconds.
3. Alternatively turn the FUNCTION knob to the left ( ) until a required cooking time is displayed and press the START/+30SEC/CONFIRM ( ) button to cook on full power.
4. The microwave will automatically start to cook and the timer will start to count down as normal.

Note:
Cooking time can be extended during oven operation by pressing the START/+30SEC/CONFIRM ( ) button. (Except for auto menu and weight defrost).
Each successive press will increase the cooking time by 30 seconds.

MICROWAVE COOKING

1. Place the food to be cooked in a suitable **microwave safe** container and cover.
2. Pull the door handle to open the door, place the container in the centre of the glass turntable and securely close the oven door.
3. Press the MICROWAVE ( ) button to select microwave function, and the power level P100 flashes in the display. If wanting to cook at less than full power, press the MICROWAVE ( ) button repeatedly or turn the FUNCTION knob to select the power level of choice (see ‘Power levels table’ for options).
4. Press START/+30SEC/CONFIRM ( ) button to save the setting and turn the FUNCTION knob until the required cooking time is displayed (5 seconds to 95 minutes). Please note that the increments that the timer increases varies depending on the length of cooking time required (see ‘Time increment’ table). For example, when choosing a

cooking time between 1 and 5 minutes the timer will increase in increments of 10 seconds.

5. Press the START/+30SEC/CONFIRM (▷ +30S) button to select. A bleep will be heard.
6. The microwave will start to cook and the timer will start to count down.
7. Cooking can be interrupted to stir contents or check cooking progress by opening the door. Settings will be retained and cooking will restart when the door is closed and the START/+30SEC/CONFIRM (▷ +30S) button is pressed.
8. After the cooking time has finished, the display will show the clock, the microwave will turn off automatically and five bleeps will sound.
9. Allow food to stand for 30 seconds to one minute before stirring or serving.
10. The oven can be stopped at any time by pressing the STOP/CLEAR (II) button or by opening the door. Pressing the STOP/CLEAR (II) button once (with the door closed) will stop the cooking; pressing the button twice will clear the settings.

Notes:

- In the process of setting, if the STOP/CLEAR (II) button is pressed or if there is no operation within 1 minute, the oven will go back to the former setting automatically.
- Cooking time can be extended during microwaving cooking by pressing the START/+30SEC/CONFIRM (▷ +30S) button. Each successive press will increase the cooking time by 30 seconds.
- To check the time during oven operation, press the CLOCK/KITCHEN TIMER (◷) button and the time will display briefly before returning to the countdown timer.
- To check the current microwave power level during oven operation, press the MICROWAVE (≋) button and the power level will display briefly before returning to the countdown timer.

DEFROSTING

1. Weight defrost

1.1. Weigh the item to be defrosted, place in a suitable **microwave safe** container and position in the centre of the glass turntable. Securely close the microwave door.

1.2. Press the DEFROST (*💧) button once (the display will show d-1) and then enter the weight of the item (100 - 2000g) by turning the FUNCTION knob until the corresponding weight is displayed.

1.3. Press the START/+30SEC/CONFIRM (▷ +30S) button, the defrost time will be calculated automatically, the microwave will start to defrost and the timer will count down.

1.4. After the defrost time has finished the display will show the clock, the microwave will turn off automatically and five bleeps will sound.

Note:

Approximately one-fifth way through the weight defrost program two bleeps will be heard, and food should be rearranged or turned over.

2. Time defrost

2.1. Place the food to be defrosted in a suitable **microwave safe** container and position in the centre of the glass turntable. Securely close the microwave door.

2.2. Press the DEFROST (*💧) button twice (the display will show d-2) and then enter the defrost time (maximum 95 minutes) by using the FUNCTION knob.

2.3. Press the START/+30SEC/CONFIRM (▷ +30S) button, the microwave will start to defrost and the timer will count down.

2.4. After the defrost time has finished the display will show the clock, the microwave will turn off automatically and five bleeps will sound.

Notes:

- Approximately half way through the time defrost program two bleeps will be heard, and food should be rearranged or turned over.
- Defrosting time can be extended during time defrosting by pressing the START/+30SEC/CONFIRM (▷ +30S) button. Each successive press will increase the cooking time by 30 seconds.

GRILL COOKING

1. Place the food to be cooked in a suitable **grill safe** container. Pull the door handle to open the door and place the container in the centre of the glass turntable or alternatively place the food directly on the grill rack with a **grill safe** collecting tray beneath.
2. Securely close the oven door.
3. Press the GRILL/COMBI/CONVECTION ( ) button once and turn the FUNCTION knob or press the button repeatedly until ‘G-1’ is shown in the display.
4. Press the START/+30SEC/CONFIRM ( ) button to save the setting and turn the FUNCTION knob until the required cooking time is displayed (5 seconds to 95 minutes).
5. Press the START/+30SEC/CONFIRM ( ) button. A bleep will be heard, the grill will start to cook, the timer will start to count down.
6. Grilling can be interrupted to turn the food over or to check on progress by opening the door. Close the door and press the START/+30SEC/CONFIRM ( ) button to resume grilling.
7. Approximately half way through the grill program two bleeps will be heard as a reminder to turn food over if two-side grilling is required.
8. After the cooking time has finished, five bleeps will sound and the grill turns off automatically.
9. The oven can be stopped at any time by pressing the STOP/CLEAR ( ) button or by opening the door. Pressing the STOP/CLEAR ( ) button once (with the door closed) will stop the cooking; pressing the button twice will clear the settings.

Notes:

- Cooking time can be extended during grill cooking by pressing the START/+30SEC/CONFIRM ( ) button. Each successive press will increase the cooking time by 30 seconds.
- The grilling temperature is default and is approximately 170˚C.

COMBINATION COOKING

This function combines a variety of cooking methods and four-preset programmes are available and these are accessed by pressing the GRILL/COMBI/CONVECTION ( ) button once and turn the FUNCTION knob or press the button repeatedly to scroll though the options available.

1. Place the food to be cooked in a suitable container for the cooking combination mode to be selected – see page 10 for cooking methods used and page 21 for the suitable container.
2. Pull the door handle to open the door and place the container in the centre of the oven. Securely close the oven door.
3. Press the GRILL/COMBI/CONVECTION ( ) button and turn the FUNCTION knob until the desired combination mode (C-1, C-2, C-3 or C-4) is shown in the display.
4. Press the START/+30SEC/CONFIRM ( ) button to save the setting and turn the FUNCTION knob until the required cooking time is displayed (5 seconds to 95 minutes).
5. Press the START/+30SEC/CONFIRM button. A bleep will be heard, the oven will start to cook and the timer will start to count down.
6. After the cooking time has finished, five bleeps will sound and the oven will turn off automatically.
7. Allow food to stand for 30 seconds to one minute before stirring or serving.
8. Cooking can be interrupted to turn the food over or to check on progress by opening the door. Close the door and press the START/+30SEC/CONFIRM ( ) button to resume cooking.
9. The oven can be stopped at any time by pressing the STOP/CLEAR ( ) button or by opening the door. Pressing the STOP/CLEAR ( ) button once (with the door closed) will stop the cooking; pressing the button twice will clear the settings.

Notes:

- Combination 1 - suitable for casserole and meat loaf.
- Combination 2 - suitable for fish and vegetable.
- Combination 3 - suitable for pie and cake.
- Combination 4 - suitable for pizza and roast chicken.
- Cooking time can be extended during combination cooking by pressing

the START/+30SEC/CONFIRM ( ) button. Each successive press will increase the cooking time by 30 seconds.

- To check the current combination mode during oven operation, press the GRILL/COMBI/CONVECTION ( ) button and the combi mode will display briefly before returning to the countdown timer.

CONVECTION COOKING

The convection oven circulates hot air throughout the oven cavity to brown and crisp foods quickly and evenly in the traditional way. The microwave function is not used. It is recommended that the oven is preheated to the desired temperature before placing the food in the oven.

To preheat and cook with convection

1. Press the GRILL/COMBI/CONVECTION ( ) button, and turn the Function knob until the desired cooking temperature (110-200°C) is displayed.
2. Press the START/+30SEC/CONFIRM ( ) button to confirm the temperature.
3. Press the START/+30SEC/CONFIRM ( ) button again to start preheating the oven.
4. When two bleeps are heard and the temperature will flash in the display, pull the door handle to open the door and place the food on / into a suitable container and then into the oven. Securely close the oven door.
5. Turn the FUNCTION knob until the required cooking time is displayed (5 seconds to 95 minutes) and press the START/+30SEC/CONFIRM ( ) button to accept and start cooking.
6. After the cooking time has finished, five bleeps will sound.

Note:
If there is no operation a few minutes after the oven has bleeped, further five bleeps will be heard and the oven will stop and switch to standby mode automatically.

To convection cook without preheating

1. Place the food on / into a suitable container and then into the oven. Securely close the oven door.
2. Press the GRILL/COMBI/CONVECTION ( ) button, and turn the FUNCTION knob until the desired cooking temperature (110-200°C) is displayed.
3. Press the START/+30SEC/CONFIRM ( ) button to confirm the temperature.
4. Turn the FUNCTION knob until the required cooking time is displayed (5 seconds to 95 minutes) and press the START/+30SEC/CONFIRM ( ) button to accept and start cooking.
5. After the cooking time has finished, five bleeps will sound.

MULTISTAGE COOKING

The oven can be programmed to carry out **up to** two consecutive functions. For example, if you wish to first defrost food for 5 minutes and then cook at 80% power for 7 minutes.

1. Place the food to be defrosted in a suitable **microwave safe** container for all the cooking methods to be used. Open the door and position the container in the centre of the glass turntable. Securely close the microwave door.
2. Press the DEFROST ( ) button twice (d-2 will appear in the display) and turn the FUNCTION knob to select 5:00 minutes.
3. Press the MICROWAVE ( ) button and turn the FUNCTION knob to select the power level (e.g. P80).
4. Press the START/+30SEC/CONFIRM ( ) button to save the setting and enter the cooking time (e.g. 7 minutes) by again turning the FUNCTION knob.
5. Press the START/+30SEC/CONFIRM ( ) button again, the microwave will start to defrost immediately and then work through the cooking sequence.
6. The display will show the cooking time remaining during each cooking stage and the oven will bleep one time and 5 times at the end of the

1st stage and the 2nd cooking stage respectively.

7. Cooking can be interrupted to stir contents or check cooking progress and proceed as described in steps 8 -10 in the microwave cooking section (page12).

Notes:

- Auto cook and kitchen timer cannot be programmed into multistage cooking.
- Defrost function (time or weight) can only be programmed at the start of this function.
- Other than weight defrosting, cooking time can be extended during oven operation by pressing the START/+30SEC/CONFIRM ( ) button. Each successive press will increase the cooking time by 30 seconds.

AUTO MENU FUNCTION

The oven has a pre-programmed cooking menu that can be used immediately from start up just by turning the FUNCTION knob clockwise.

1. After checking the cooking method used in the table following, place the food to be cooked in a suitable container and cover when necessary. Open the door and place the container in the centre of the glass turntable and securely close the oven door.
2. Turn the FUNCTION knob to the RIGHT ( ) and select the auto-cooking programme of choice (see table below). Press the START/+30SEC/CONFIRM ( ) button to save the setting.
3. Turn the FUNCTION knob to select the weight or volume corresponding to the item being cooked.
4. Press the START/+30SEC/CONFIRM ( ) button. The microwave will start to cook and the timer will start to count down from the preset time.
5. Cooking can be interrupted to stir contents or check cooking progress by opening the door. Settings will be retained and cooking will restart when the door is closed and the START/+30SEC/CONFIRM ( ) button is pressed.

6. After the cooking time has finished, five bleeps will sound. Allow food to stand for 30 seconds to one minute before stirring or serving.
7. The oven can be stopped at any time by pressing the STOP/CLEAR (II) button or by opening the door. Pressing the STOP/CLEAR (II) button once (with the door closed) will stop the cooking, pressing the button twice will clear the settings.

Display	Food	Weight / quantity	Instructions
A-1	Reheat	150g 250g 350g 450g 600g	**Cooks by microwave (P100)** Place food in a bowl and cover. Check that food is heated throughout before serving.
A-2	Potato	1 (~230g) 2 (~460g) 3 (~690g)	**Cooks by microwave (P100)** For best result, use potatoes at room temperature and once the potatoes are cooked, wrap them in tin foil for at least 5 minutes to cook through. Larger or cold potatoes may need additional cooking.
A-3	Meat	150g 300g 450g 600g	**Cooks by microwave (P80)** For even cooking, cut meat into small equally sized pieces and place onto a microwave safe plate. Turn meat over half way through the cooking cycle. The cooking times are guidelines only – check that meat is cooked through before consuming.
A-4	Vegetable	150g 350g 500g	**Cooks by microwave (P100)** Boiled or steamed vegetables. Prepare vegetables and place in bowl. If boiling – cover vegetables with boiling water. If steaming – add 2 tablespoons of water per 100g of vegetables. Cover bowl with microwave safe cling film and pierce the cling film before operation.
A-5	Fish	150g 250g 350g 450g 650g	**Cooks by microwave (P80)** Place food in a bowl and cover. Allow to stand for 2 minutes before serving. Check that fish is cooked through before consuming.

A-6	Pasta	50g 100g 150g	**Cooks by microwave (P80)** Place pasta in a bowl with **eight times** the quantity of water and cover. If using pasta with longer cooking times (e.g. fusilli) additional cooking may be required.
A-7	Soup	200ml 400ml 600ml	**Cooks by microwave (P100)** Heating liquid from 5-10°C. Use wide neck cup / mug and do not cover.
A-8	Cake	475g	**Uses convection cooking mode with 150°C warm up function and 55 minutes cooking time.** Check recipe or packet for suitability of cooking temperature and cake weight. Select auto function, press START/+30SEC./CONFIRM button and allow oven to preheat. When two bleeps are heard the oven will pause and the display flashes. Place cake in the oven and press START/+30SEC./CONFIRM button to begin cooking.
A-9	Pizza	100g 200g 300g	**Cooks by a combination of microwave and convection (P100 + convection 200°C)** To warm chilled pizza.
A-10	Roast Chicken	500g 750g 1 000g 1 200g	**Cooks by a combination of microwave and convection (P100 + convection 200°C)** Turn chicken over two-third way through the cooking cycle. The cooking times are guidelines only – check that chicken is cooked through before consuming.

CLEANING

Clean the oven and seals to remove food debris on a weekly basis and more often if required. Failure to maintain the oven and seals in a clean condition could lead to deterioration of the surface or seals, adversely affect the life of the oven and possibly result in a hazardous situation (possible release of microwave energy).

Clean the oven after each use, if food is cooked uncovered and especially if fatty foods are cooked.

1. Switch off, unplug the oven and allow the oven to cool completely.
2. Wipe surfaces and seals with a soft damp cloth (not wet). Do not use abrasive cleaning products or metal scrapers to clean the glass door of the oven as this could damage the surface and cause breakage. Do not immerse in water. Do not use a steam cleaner.
3. The glass turntable and turntable roller can be washed in hot water with a little washing up liquid. **NOT SUITABLE FOR DISHWASHERS.**
4. Always allow surfaces to fully dry before using the oven again.

GUIDE FOR MATERIALS SUITABLE FOR USE IN THE OVEN

Material	**Suitability for use in**		
	Microwave	**Grill/Convection**	**Combination**
Glassware	Heat resistant only	Heat resistant only	Heat resistant only
Ceramic ware	Heat resistant only	Heat resistant only	Heat resistant only
Plastic containers **Not melamine**	Microwave safe only Avoid using with food with high fat or sugar contents	No	No
Plastic film	Microwave safe only	No	No
Kitchen paper	Only for reheating do not leave unattended	No	No
Metal tray or rack	No	Yes	No
Aluminium foil & foil containers	No	Yes	No
Browning dishes	Place upturned plate on the glass turntable (to prevent heat stress) before using	No	No

DO NOT use metallic containers for food and beverages, aluminium foil, or any other metal trimmed packaging when operating in microwave or combination modes. The metal rack is suitable for use in grill and convection modes.

GENERAL MICROWAVE COOKING ADVICE

- Food cooking times will vary with microwave wattage (MAFF rating). When following recipes and on pack cooking instructions always check the MAFF rating / wattage of the appliance being used (marked on the front of the microwave) and follow the corresponding cooking advice.
- Beverages can result in delayed eruptive boiling; therefore caremust be taken when handling the container.
- Remove lids from containers before placing in the microwave, pierce plastic films and do not use vessels with sealed or restricted openings since they are liable to explode.
- **Pierce the skin or membranes of food (e.g. potatoes, apples, fish, chicken, eggs) in several places before cooking. Never cook or heat eggs in their shell or whole hard boiled eggs, as they may explode even after cooking has been completed.**
- Ensure food is similar size and density. Large dense items take longer to cook than small ones e.g. potatoes take longer to cook than peas.
- Food quantity will affect the cooking time, e.g. two potatoes take longer than one.
- The shape of food will affect the cooking time; place the thickest part of food on the outside of the plate.
- Leave food to stand for a short period after cooking or defrosting to allow the temperature to become uniform.

TROUBLESHOOTING

Observation	Potential cause / solution
Oven will not start	Plug not fully inserted into the mains socket or not switched on
	Door is open
	Incorrect operation
	Do you have a power cut?
Arcing or sparking	Unsuitable materials used when using microwave.
	Oven is operated when empty
	Spilled food remains in oven cavity
Unevenly cooked food	Unsuitable materials used when using microwave.
	Food not fully defrosted before cooking
	Power setting for cooking time is incorrect
	Food was not turned or stirred during cooking
	Uneven sized food
Overcooked food	Power setting for cooking time is incorrect
	Cooking period set too long
Undercooked food	Food not fully defrosted before cooking
	Unsuitable materials used when using microwave
	Ventilation ports restricted
	Power setting for cooking time is incorrect
Incomplete defrosting	Unsuitable materials used when defrosting
	Defrost time too short
	Food was not turned or stirred during defrosting
	Uneven sized food
Noisy turntable	Food residue between turntable roller and base of cavity
	Glass turntable not correctly positioned on roller
Oven light does not illuminate	Bulb has burnt out
	Start button has not been pressed

TECHNICAL SPECIFICATION

De'Longhi Geometric 23L 900W Combi		
Model		AC9P022DT-S00F
Rated Voltage & Frequency		230 - 240V~ 50Hz
Rated Power Input (Microwave)		1350-1450W
Rated Power Input (Grill)		900-1000W
Rated Power Input (Convection)		1600-1700W
Rated Microwave Output		800-900W
MAFF rating		E
Rated Microwave Frequency		2450MHz
Capacity	Overall	23 litres
	Useable	13 litres
Class rating		1 (earthed)
BS 1362 fuse		13A
Diameter of glass turntable		288mm
Product dimensions (external)		469 x 415 x 280 mm
Product weight (net)		14.9kg approx.

ENERGY CONSUMPTION

Product information for power consumption and maximum time to reach applicable low power mode.

Off mode	0.5 W
Standby mode	0.8 W
The maximum time needed for the microwave oven to automatically reach the applicable low power mode or condition.	20 minutes

This appliance complies with European regulation no. 1935/2004 of 27/10/2004 on food contact materials. The product is classified as a Group 2, Class B, ISM appliance. Group 2 includes all ISM (Industrial, Scientific or Medical) appliances in which radio frequencies are generated intentionally and/or used in the form of electromagnetic radiation to treat materials, together with electroerosion equipment. Class B includes equipment for domestic use or on premises directly connected to low voltage electricity supply for supplying buildings for residential use.

RECYCLING ELECTRICAL PRODUCTS

You should now recycle your waste electrical goods and in doing so help the environment.

This symbol means an electrical product should not be disposed of with normal household waste. Please ensure it is taken to a suitable facility for disposal when finished with.

Visit www.recycle-more.co.uk, click on “bank locator” and enter your postcode to find your nearest recycling site.

PLUG / WIRING ADVICE

The wires in this mains lead are coloured in accordance with the following UK electrical code:

BLUE = NEUTRAL
BROWN = LIVE
GREEN + YELLOW = EARTH

Non-rewireable plug

This appliance may be fitted with a “non-rewireable” plug. If you need to change the fuse in a “non-rewireable” plug, the fuse cover must be refitted. If the fuse cover is lost or damaged, the appliance must not be used.

Rewireable plug

The colours of the wires in the mains lead of this appliance may not correspond with the coloured markings identifying the terminals in a rewireable plug. **Rewireable plugs should only be replaced by a suitably competent person. If in doubt, consult a qualified electrician.**

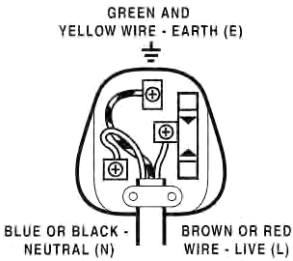

The BLUE wire must be connected to the terminal marked with the letter N

The BROWN wire must be connected to the terminal marked with the letter L

The GREEN & YELLOW wire must be connecting to the terminal marked with the letter E or the earth symbol ⏚.

If you encounter any problems with this product please call our customer care team on
0345 640 30 30

Produced in China under licence for De’Longhi.

Argos Limited, London, EC1M 6HA, UK.
Argos (N.I.) Ltd, Forestside Shopping Centre, Upper Galwally, Belfast, BT8 6FX, UK.

All brand names are trademarks of their respective owners.
argos.co.uk/help/contact-us

PRODUCT GUARANTEE

This product is guaranteed against manufacturing defects for a period of

Year

This product is guaranteed for twelve months from the date of original purchase.

Any defect that arises due to faulty materials or workmanship will either be replaced, refunded or repaired free of charge where possible during this period by the dealer from whom you purchased the unit.

The guarantee is subject to the following provisions:

- The guarantee does not cover accidental damage, misuse, cabinet parts, knobs or consumable items.
- The product must be correctly installed and operated in accordance with the instructions contained in this manual. A replacement copy of this instruction manual can be obtained from www.argos-support.co.uk.
- It must be used solely for domestic purpose.
- The guarantee will be rendered invalided if the product is re-sold or has been damaged by inexpert repair.
- Specifications are subject to change without notice.
- The manufacturer disclaims any liability for the incidental or consequential damages.
- The guarantee is in addition to, and does not diminish your statutory or legal rights.

Guarantor: Argos Ltd.
London
EC1M 6HA, UK
www.argos-support.co.uk