Russell Hobbs

60cm Wide Dishwasher
Instruction Manual

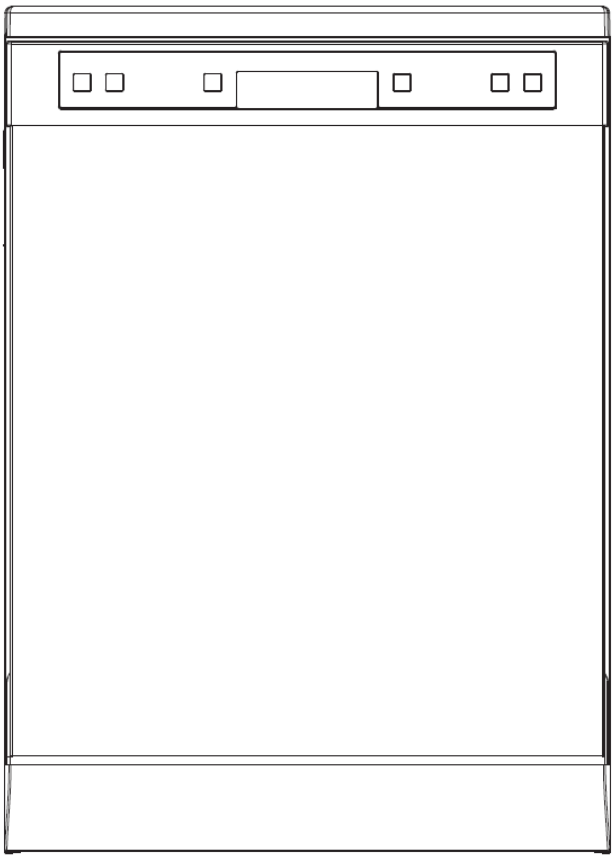

Model number(s):
RH60DW00E2 W/B/SS/DS

IMPORTANT:
RETAIN FOR FUTURE REFERENCE

Contents

Safety Instructions	.....	3-4
Water & Electrical connection	.....	5-6
Disposal	.....	6
Saving Energy & Water	.....	7
Unpacking the Dishwasher	.....	8
Product Overview	.....	9-11
Control Panel	.....	10
Installation	.....	12-15
Positioning the Appliance	.....	13-14
Water & Drain Connections	.....	16-17
First Time Use	.....	18
Water Hardness & Setting the Salt	.....	18-20
Control Panel	.....	21
Rinse Aid & Detergent	.....	22-26
Auto Door	.....	26
Loading the Dishwasher	.....	27-32
Washing Programmes & Cycles	.....	33-35
Maintenance & Cleaning	.....	36-40
Troubleshooting	.....	41-44
Error Codes	.....	44
Connection to the Mains Supply	.....	45
Guarantee	.....	46
Product Fiche	.....	47

Safety Instructions

The appliance was designed and manufactured in compliance with current international safety standards. The following information has been provided for safety reasons and should therefore be read carefully. Keep this instruction manual in a safe place for future reference. If the appliance is sold, given away or moved, please ensure the manual is kept with the machine, so that the new owner may benefit from the advice contained within it.

Please read this instruction manual carefully: it contains important information regarding the safe installation, use and maintenance of the appliance.

- The appliance was designed for domestic use inside the home and is not intended for commercial or industrial use.
- Use the dishwasher only for its intended function.
- This appliance can be used by children aged from 8years and above and persons with reduced physical sensory or mental capabilities or lack of experience and knowledge if they have been given supervision or instruction concerning use of the appliance in a safe way and understand the hazards involved.
- Children should be supervised to ensure that they do not play with the appliance.
- Cleaning and user maintenance shall not be done by children without supervision.
- DO NOT allow children to play with the appliance or tamper with its controls.
- The appliance must be used by adults only, to wash domestic crockery according to the instructions in this manual.
- If the appliance breaks down, do not under any circumstances touch the internal parts in an attempt to carry out the repair work yourself.
- It is hazardous for anyone other than a competent person to carry out any service or repair operation that involves the removal of the cover.
- Do not tamper with the controls.
- If the supply cord is damaged, it must be replaced by the manufacturer, its service agent or similarly qualified persons in order to avoid a hazard.
- During installation, the power supply cable must not be excessively or dangerously bent or flattened.,
- The appliance must not be installed outdoors, even in covered areas. It is extremely dangerous to leave the machine exposed to rain and storms.
- Do not touch the appliance when barefoot.
- When unplugging the appliance always pull the plug from the mains socket, do not pull on the cable.
- The water supply tap must be shut off and the plug should be removed from the electrical socket before cleaning the appliance or carrying out any maintenance work.
- The door should not be left open as it may create a dangerous obstacle.

Safety Instructions

- If your family includes children:
    - Keep detergents and rinse aids away from children.
    - Keep children away from the open door of a dishwasher, there could still be some detergent left inside.
- Do not operate your dishwasher unless all enclosure panels are properly in place. Open the door very carefully if the dishwasher is operating, there is a risk of water squirting out.
- Do not allow the control panel to become wet. Clean with a soft, damp cloth.
- Do not use detergents, abrasives or spray-on cleaners on the control panel.
- Dishwasher detergents are strongly alkaline, they can be extremely dangerous if swallowed. Avoid contact with skin and eyes and keep children away from the dishwasher when the door is open.
- Do not use detergents not designed for an automatic dishwasher. Never use soap, laundry detergent, or hand washing detergent in your dishwasher. Keep these products out of the reach of children.
- Ensure you do not use any corrosive chemicals or vapours in the appliance. It is not designed for industrial or laboratory use.
- You should clean your dishwasher with a damp cloth. Don't allow water to seep into any openings.
- Do not lean or sit on the open door of the appliance: this may cause the appliance to overturn.
- Never put any objects into the openings on the outer case.
- **WARNING:** Knives and other utensils with sharp points must be loaded in the basket with their points down or placed in a horizontal position.
- Do not place any heavy objects on or stand on the door when it is open. The appliance could tip forward.
- When loading items to be washed, position sharp items so that they are not likely to damage the door seal.
- Check that the detergent compartment is empty after completion of the wash cycle.
- Do not wash plastic items unless they are marked dishwasher safe or the equivalent. For plastic items not marked, check the manufacturer's recommendations.
- The packaging material should not be used as a toy: it can become a choking or suffocation hazard.
- Packaging material could be dangerous for children.
- The maximum number of place settings to be washed is 12.
- The door should not be left in the open position since this could present a tripping hazard.
- **Important notes**
- **Any technical checks should be conducted exclusively by a trained and authorised technician: Repairs carried out by unauthorised persons will invalidate the guarantee, as well as posing a potential hazard to the user.**
- **The manufacturer declines all responsibility for damage to persons or property resulting from failure to observe the above precautions, from tampering with even a single component or from the use of non-original spare parts.**

Water and Electrical Connection

Important note: Connection to the water and electricity supplies should only be performed by a qualified technician.

Electrical Connection

Before inserting the plug into the electrical socket, make sure that:

- The socket is earthed and complies with current regulations;
- The socket can withstand the maximum load of the appliance, which is indicated on the appliance's rating
- The power supply voltage falls within the appliance's rating
- The socket is compatible with the plug of the appliance. If this is not the case, ask an authorised technician to replace the plug
- Do not use extension cables or multiple sockets.
- Once the appliance has been installed, the power supply cable and the electrical socket should be easily accessible.
- The cable should not be bent or compressed.

Important notes:

- **If the power supply cable is damaged, it must be replaced by the manufacturer or its Technical Assistance Service in order to prevent all potential hazards.**
- **This appliance must be earthed.**
- **Your appliance comes fitted with a plug and a 13A fuse. If you need to replace the fuse, only those rated at 13A and ASTA approved to BS1362 should be used. Correct replacement is identified by colour coding or the marking on base of plug.**
- **DO NOT use the plug unless the fuse cover is fitted.**

Water connection

- The dishwasher should not stand on top of the water hoses or the electricity supply cable.
- If the inlet hose is not long enough, contact a specialist store or an authorised technician.
- The hose should not be bent or compressed.
- The appliance must be connected to the water supply network using new hoses. Do not use old hoses.
- Ensure that the new hose supplied is connected and the old hose is disposed of safely.
- DO NOT overtighten the hose connector, hand tight is sufficient.
- Ensure the fill hose is not kinked.

Water and Electrical Connection

- Tap connections (not supplied): A range of adaptors are available to suit your tap.
- DO NOT connect the dishwasher to a single outlet instantaneous water heater or an electric heater.
- It MUST NOT be connected to a surface water drain.
- The maximum permissible inlet water pressure is 1Mpa.
- The minimum permissible inlet water pressure is 0.04Mpa.
- Do not abuse, sit on, or stand on the door or dish rack of the dishwasher.
- Do not obstruct any ventilation openings.

If the appliance must be moved at any time, keep it in an upright position; if absolutely necessary, it may be tilted onto its back.

Disposal of old electrical appliances

- The European Directive 2012/19/EU on Waste Electrical and Electronic Equipment (WEEE), requires that old household electrical appliances must not be disposed of in the normal unsorted municipal waste stream. Old appliances must be collected separately in order to optimise the recovery and recycling of the materials they contain and reduce the impact on human health and the environment. The crossed out “wheeled bin” symbol on the product reminds you of your obligation, that when you dispose of the appliance it must be separately collected. Consumers should contact their local authority or retailer for information concerning the correct disposal of their old appliance. Saving energy and respecting the environment.
- Please dispose of packaging and old appliances carefully.
- To minimise risk of injury to children, remove the door, plug and cut mains cable off flush with the appliance.
- Dispose of these parts separately to ensure that the appliance can no longer be plugged into a mains socket and the door cannot be locked shut.

Saving water and energy

- Only start a wash cycle when the dishwasher is full.
- While waiting for the dishwasher to be filled, prevent unpleasant odours with the Rapid Wash.
- Select a wash cycle that is suited to the type of dishes/crockery and to the soil level of the dishes/crockery using (see the washing programme section): - for dishes with a normal soil level, use the Eco wash cycle, which guarantees low energy and water consumption levels.
    - If the load is smaller than usual the dishes can be loaded onto either the upper or lower rack and the individual spray arm activated only.
- If your electricity supply contract gives details of electricity saving time bands, run wash cycles during the periods when a lower tariff is applied.
    - Use the Time Delay start function to help you organise the wash cycles accordingly.
- We strongly recommend that you use detergents that do not contain phosphates or chlorine, as these products are harmful to the environment. We recommend Phosphate-free and chlorine-free detergents containing enzymes.
- Enzymes provide a particularly effective action at temperatures around 50°C, and as a result detergents containing enzymes can be used in conjunction with low-temperature wash cycles in order to achieve the same results as a universal 65°C wash cycle.
- To avoid wasting detergent, use the product in appropriate quantities based on the manufacturer's recommendations, the hardness of the water and the soil level and quantity of the crockery. Even if they are biodegradable, detergents contain substances that may alter the balance of nature.

- Recycling & Disposal Information: As part of our continued commitment to helping the environment, we reserve the right to use quality recycled components to keep down customer costs and minimise material wastage.
- Please dispose of packaging and old appliances carefully.

- Loading the household dishwasher up to the capacity indicated by the manufacturer will contribute to energy and water savings and information. See Pages 29-30 for the correct loading of tableware.
- Manual pre-rinsing of tableware items leads to increased water and energy consumption and is not recommended.
- Washing tableware in a household dishwasher usually consumers less energy and water in the use phase than hand dishwashing when the household dishwasher is used according to the manufacturers instructions.

Unpacking the appliance

1. Remove the appliance from all packaging and check that the product has not been damaged during transportation. If it has been damaged, contact the manufacturer or the retailer and do not proceed any further with the installation process. Below are key areas to check:

- A misaligned door
- Damage to the door
- Dents or holes in side panels and the top panel
- Dents in the inside
- If you can see any damage **do not use the dishwasher**

Before using your dishwasher for the first time:

Before using the dishwasher for the first time you must complete the following, as failure to do so will invalidate the guarantee:

1. Connection to the water and electricity supplies should only be performed by a qualified technician
2. Set the water softener
3. Add 1.5Kg dishwasher salt and then fully fill the salt container with water*
4. Fill the rinse aid dispenser
5. Fill in the detergent dispenser

**Water may leak out after filling, this is normal. Follow the instructions on Filling the Salt Container for in depth guidance.*

Product Overview

Front view

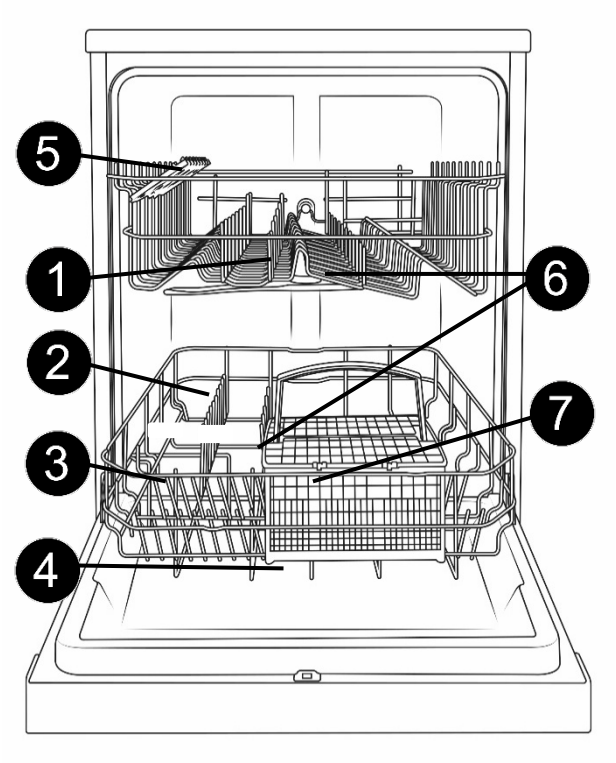

Rear view

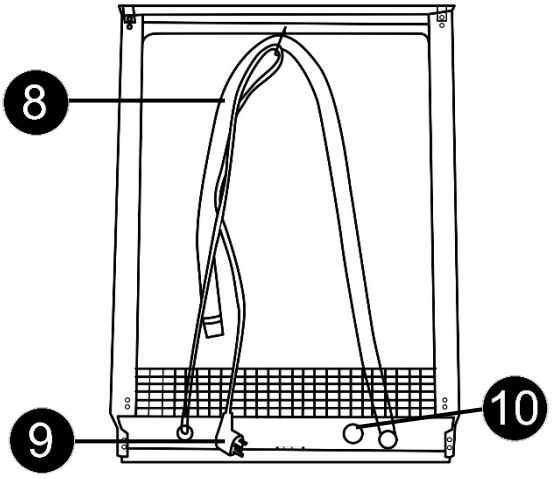

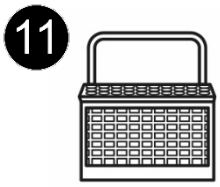

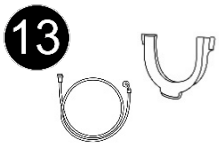

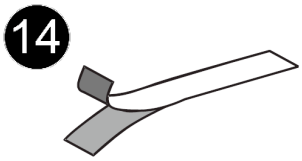

1. Upper Basket
2. Lower Basket
3. Salt Aid Container*
4. Detergent Dispenser*
5. Mug Shelf
6. Spray Arms
7. Filter (not shown)
8. Drain Pipe
9. Power Cord
10. Inlet Pipe Connector
11. Cutlery Basket
12. Salt Funnel
13. Inlet pipe & drain pipe hook
14. Steam Protection Strip

**not shown on diagram*

Control Panel

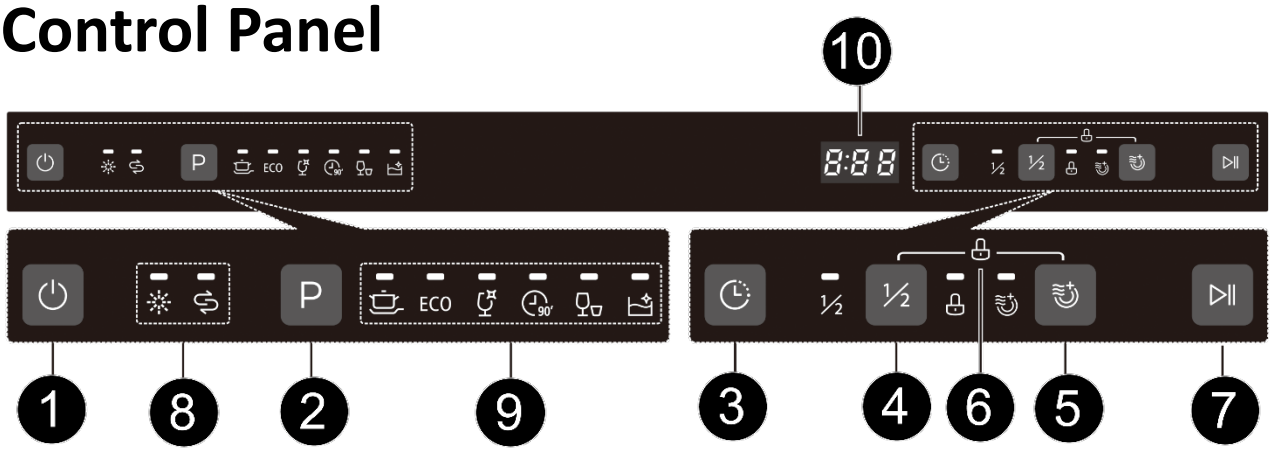

1. On/Off
2. Programme Selection
3. Programme Delay (Delay cycle up to 24 hours in one-hour increments)
4. Half-Load
5. Extra Drying (can only be used with Intensive, ECO, Glass and 90 min)
6. Panel Lock Control (Press and hold buttons 4 + 5 for 3 seconds simultaneously)
7. Start/Pause
8. Warning Indicators
9. Programme Indicator
10. Screen Display

Control Panel Functions and Indicators

Programme Selection
Press to select the programme you wish to use.

- Intensive
- Eco* ECO
- Glass
- Quick 90'
- Rapid Clean
- Self-Clean

Please see washing programmes section for the full details of the washing programmes.

Warning Indicators

- Rinse Aid Dispenser Low/Empty
- Salt Container Low/Empty
- Lock

**Suitable to clean normally soiled tableware, and the most efficient programme in terms of its combined energy and water consumption*

Product Overview

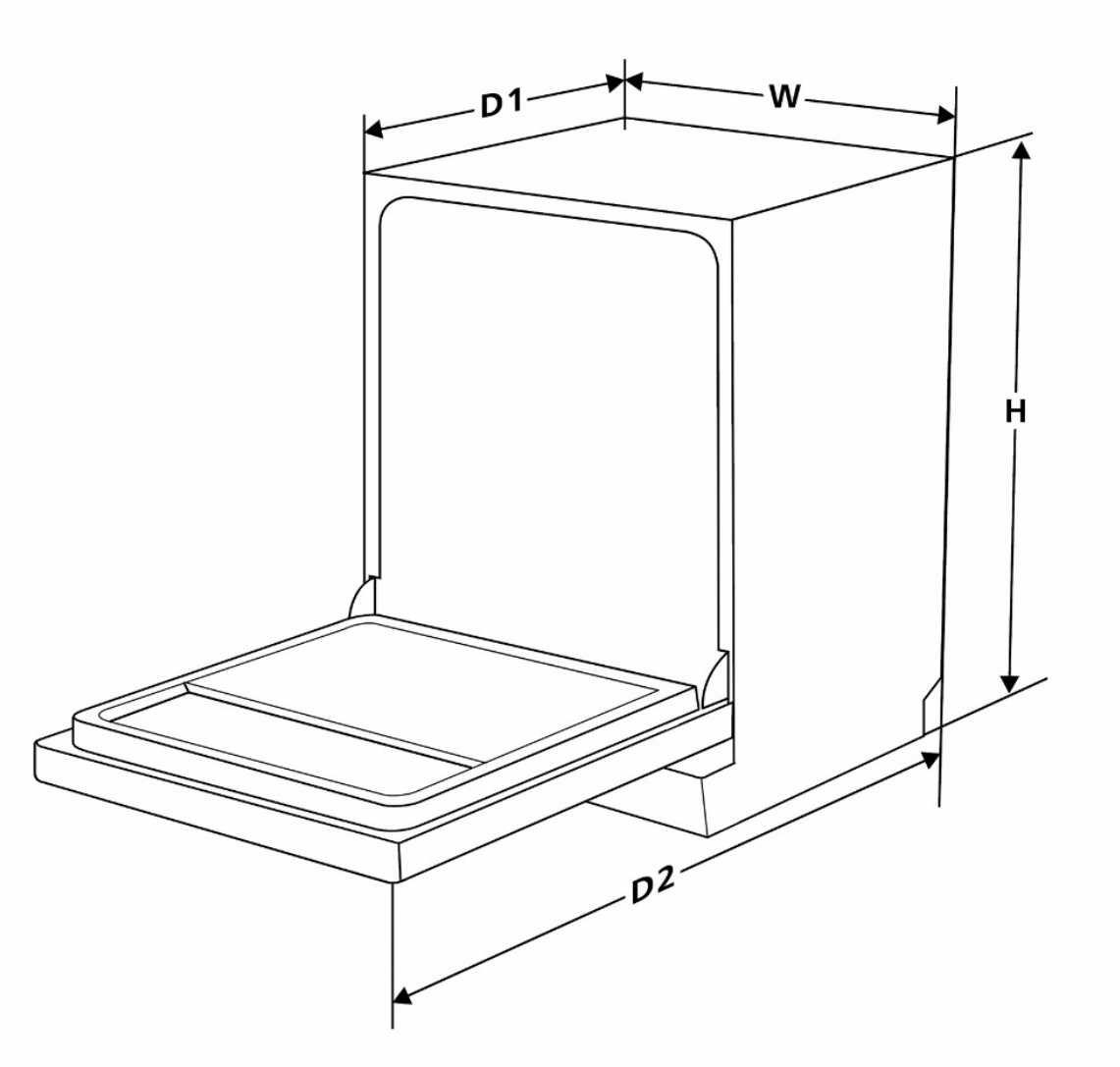

Height (H)	845mm
Width (W)	598mm
Depth (D1)	600mm (with the door closed)
Depth (D2)	1150mm (with the door opened 90°)

Installation Guidance

- This appliance can be installed as a freestanding, in-line with worktops, or as an undercounter dishwasher. Follow the instructions for your preferred installation method in “Positioning for Installation”
- It is recommended that 2 people handle the dishwasher during installation.
- Avoid damaging the product during installation, positioning of the appliance requires two people in order to avoid injuries or damage to the appliance.
- We recommend wearing gloves when installing the appliance to avoid personal injury, edges of the door and other parts of the appliance are sharp.
- **DO NOT** position in direct sunlight or expose to continuous heat or extreme temperature (e.g. next to a radiator, boiler or cooker). If this is not feasible, then you should install an insulation plate between the appliance and the adjacent heat source.
- Ensure the electrical socket remains accessible after your appliance is installed.
- Place the appliance flatl and firmly on a solid base.
- All parts removed must be saved to do the reinstallation in the future. Ensure the dishwasher is unplugged and empty.
- Ensure the door can open to a minimum 90° with clearance around all sides to avoid damage to the appliance or personal injury.
- The installation position of the dishwasher should be near the existing water inlet, drain/water outlet and electrical supply point.
- The side of the cabinet that is adjacent to the water supply and drainage should be chosen to facilitate the connection of the water inlet hose and drain hose of the dishwasher.
- **DO NOT** use an extension cord or an adapter plug with this appliance.
- **DO NOT** cut or remove the earthing connection from the power cord.
- Ensure the power cord is not underneath any of the appliances feet or trapped by any part of the appliance.

Positioning the appliance

Choose the preferred installation method and position the appliance in the desired location. The back of the lid should rest against the wall behind it, and the sides, along the adjacent cabinets or walls. If installing under-counter, ensure the appliance is flush to the front cabinet with a gap at the rear. The dishwasher is supplied with water inlet and drain hoses that can be positioned either to the right or the left sides to facilitate proper installation.

Once the appliance is positioned for levelling, the height of the dishwasher may be altered by adjusting the height of the feet; the appliance should not be inclined more than 2°.

Positioning for Installation

The dishwasher should only be installed close to existing water supplies, drain outlets, and electrical power supplies. A sufficiently qualified technician may be required to create access on the surrounding cabinets for the electrical and water supplies.

DO NOT install with the electrical power socket behind the appliance.

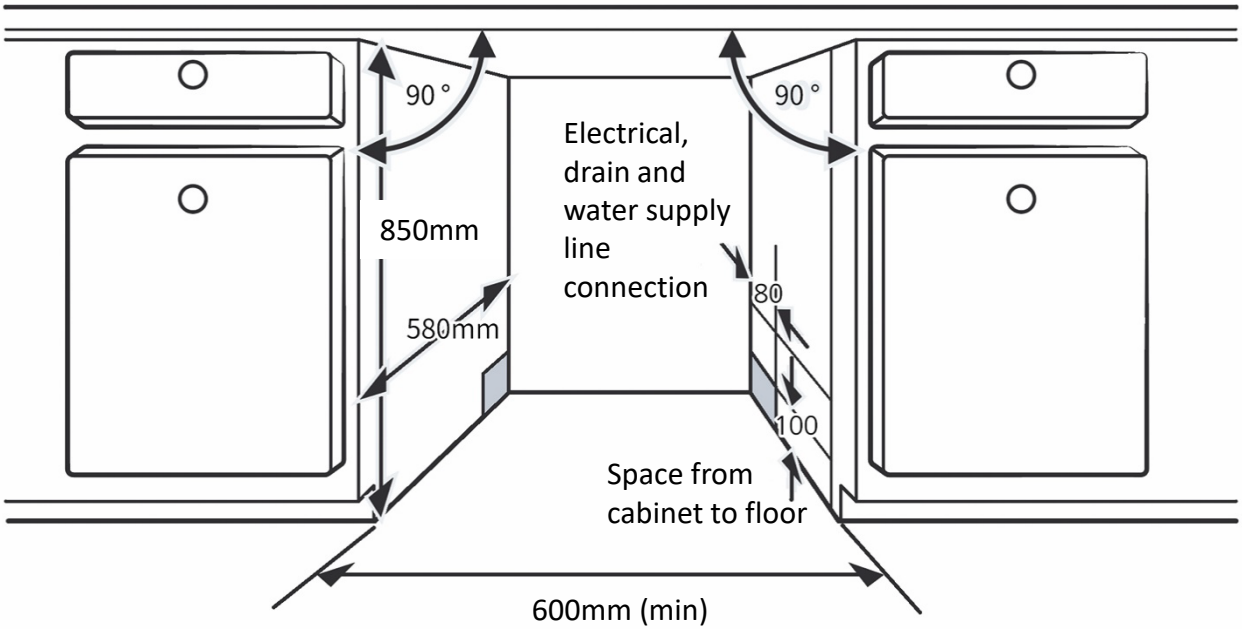

Ensure a maximum of 5mm between the top of the appliance and the worktop, and the dishwasher front and the cabinets to the sides.

If installed in a corner position there must be a minimum of 50mm clearance between the cabinets and the dishwasher door.

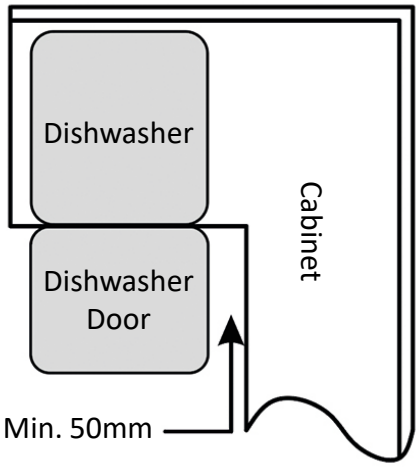

Note: Depending on where your electrical outlet is, you may need to cut a hole in the opposite cabinet side. Damage caused during installation is not covered under warranty and no liability will be assumed for damage

Positioning for Installation

Your appliance can be installed either as a freestanding unit, in-line with the kitchen worktop, or underneath the worktop surface. Select the most appropriate installation for your requirements. It is recommended to consult a trained installer to perform any installations on cabinets, worktops, plumbing or electrical supplies.

NEVER install with the electrical power socket directly behind the appliance.

Fitting 1 - Freestanding and/or In-Line

The dishwasher can be positioned at a maximum height of 845mm to fit between cabinets in-line with the kitchen worktop of the same height (check your worktop height).

Position the appliance between the two cabinets, and follow the foot adjustment instructions to level with the worktops (maximum height 845mm) before installing.

The top of the dishwasher does not require any treatment as it is scratchproof and stainproof.**

***may stain if harsh chemicals or solutions used on the appliance for extended periods.*

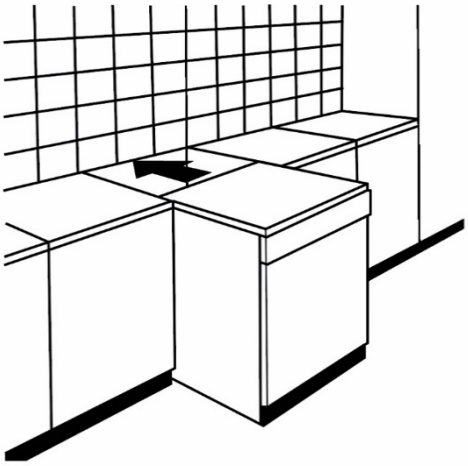

Fitting 2 – Undercounter Installation

The dishwasher can be positioned intact under the worktop.

Prior to installation, apply the Steam Protection Strip (supplied) to the underside of the worktop. This will help prevent escaping steam from damaging surfaces.

Once positioned under the worktop, follow the foot adjustment instructions to bring flush to the work top (maximum height 845mm). Access may become difficult once appliance is positioned under counter, if so follow foot levelling guide prior to installation.

Installation

Levelling the appliance

Your appliance must be levelled to ensure optimal performance and prevent issues.

We always recommend to level the appliance prior to install position, as access may become difficult once positioned. To assist in installation it may be beneficial to ensure front feet are at the minimum height prior to installing, then levelling the front feet once in position. The appliance should not be inclined more than 2°.

The four feet are shaped as a hexagon to allow for easy adjustment with a 40mm spanner, or alternatively a flat-head screwdriver may be inserted into the slots to adjust. Turn the spanner or screwdriver in a clockwise direction to extend, or an anti-clockwise direction to retract the foot from the appliance.

Front

If levelling prior to installation, we recommend taking steps to protect your flooring from scratches before moving the appliance. Refer to your flooring manufacturer for further information.

Connection of the Water Supply & Drain Hose

Important notes:

- **Connection to the water and electricity supplies should only be performed by a qualified technician.**
- **Keep hoses and cables free of obstruction and kinks. Do not allow the appliance to rest on the hoses or cables.**

Connection of the Drain hose

Important notes:

- **Before connecting the drain hose, remove any internal restrictions; this will prevent a build up of debris which could cause a blockage. Remove any restrictions from the waste spigot and ensure that the sealing bung is removed.**
- **It MUST NOT be connected to a surface water drain.**
- **Do not connect the dishwasher to the drain with an extended drainage hose (use the ones supplied with the appliance). If an extension hose is needed then a pump must be installed to pump the drainage through and out.**

Insert the drain hose into a drain pipe that has a minimum diameter of 4cm (40mm) making sure to avoid bending or crimping it. Use the drain hose hook that is supplied with the appliance. The top of the hose must be at a height between 40cm/400mm (B on the diagram) and 80cm/800mm (A on the diagram). The free end of the hose must not be immersed in water to avoid the back flow of it.

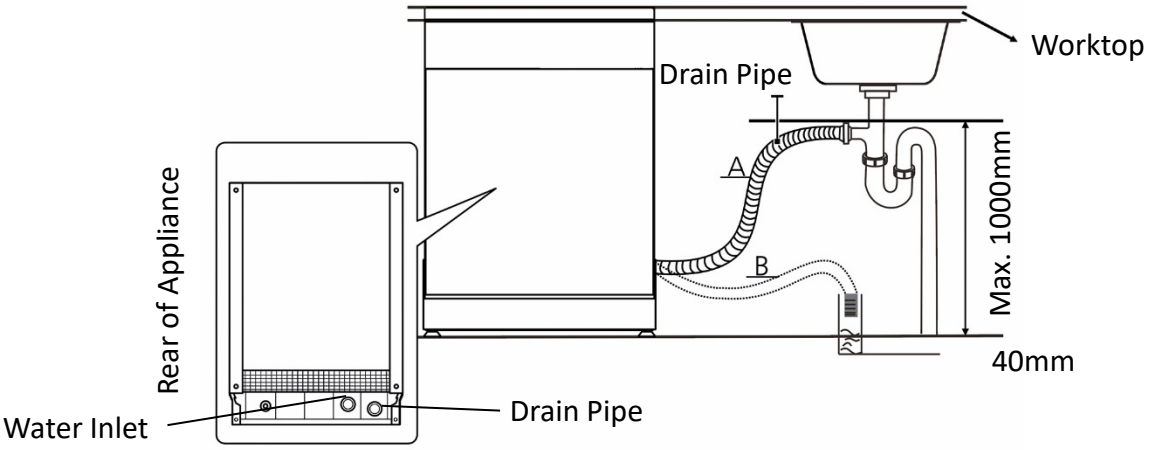

- Ensure the drain hose is securely attached to prevent it coming away while the machine is in use and causing a flood.
- Fit the end drain hose that is connected to the waste pipe securely by using a “Jubilee” type clip (not supplied).

Connection of the Water Supply & Drain Hose

Connection of the Water Supply

Important note: Before attaching the water inlet hose, run the water until it is perfectly clear so that any impurities that may be present in the water do not clog the appliance. This precaution is needed to avoid the risk of the water inlet getting blocked and damaging the appliance.

Connect the water inlet hose to a threaded 3/4(inch) connector (not supplied) and make sure that it is fastened tightly in place. The water inlet hose must be connected to a cold water supply.

Notes:

- If the inlet hose is not long enough, contact a specialist store or an authorised technician.
- The maximum permissible inlet water pressure is 1Mpa.
- The minimum permissible inlet water pressure is 0.04Mpa.
- The hose should not be bent or compressed.
- The appliance must be connected to the water supply network using new hoses.
- DO NOT use old hoses.
- Ensure that the new hose supplied is connected and the old hose is disposed of safely.
- DO NOT overtighten the hose connector, hand tight is sufficient.
- Ensure the fill hose is not kinked.
- DO NOT connect the dishwasher to a single outlet instantaneous water heater or an electric heater.

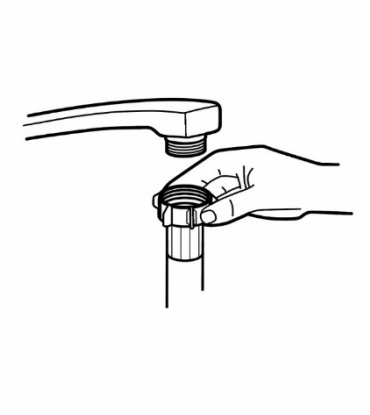

Before First Use

Before the first use of the dishwasher after installation, you must check for the following points:

1. All packing materials and printings have been removed from the dishwasher
2. The dishwasher is level and fixed properly
3. The water inlet valve is open
4. There is no leakage at the connections between the water inlet hose and the water inlet valve or the drain hose and the drain outlet
5. The inlet and drain hoses are not knotted
6. The wires are tightly connected and not trapped
7. The power is switched on

First Time Use

Important Note: Prior to installation and first use the following 4 steps must be followed, failure to do so will void your guarantee:

1. **Set the water softener level**
2. **Add 1.5kg dishwasher salt and fill the salt container with water**
3. **Add rinse aid to the rinse aid dispenser**
4. **Fill the detergent dispenser with detergent powder or a detergent tablet**

Water Hardness & Setting the Salt

The water softener must be set digitally, using the water hardness setting function. The water softener is designed to remove minerals and salts from the water, which would have a detrimental or adverse effect on the operation of the appliance. The higher the content of these minerals and salts, the harder your water is. The softener should be adjusted according to the hardness of the water in your area. Your local Water Authority can advise you on the hardness of the water in your area.

Adjusting Salt Consumption

The dishwasher is designed to allow for adjustment in the amount of salt consumed based on the hardness of the water used. This is intended to optimise and customise the level of salt consumption.

Follow the steps below for adjustment in salt level/consumption:

1. Close the door and within 60 seconds after the appliance is switched on press and hold the 'Program' button for more than 5 seconds to start the water softener setting function. The salt warning light will flash periodically during the water setting function. The unit will exit the water softener setting function if no button is pressed within 5 seconds.
2. Press the 'Program' button to select the required softener level in accordance with your local water hardness level. The selected softener level (H1–H6) will be shown directly on the display (please see the table on the following page). The softener levels will change in the following sequence: H3 → H4 → H5 → H6 → H1 → H2 (H1 is the lowest setting and H6 is the highest setting).
3. Press the 'On/off' button to set the softener level, or after 5 seconds of no operation, the softener level will be set and the appliance will return to normal operation.

Note: The hardness of the water varies from place to place. If hard water is used in the dishwasher, deposits will form on the dishes and utensils. The appliance is equipped with a special softener that uses a salt container specifically designed to eliminate lime and minerals from the water.

Water Hardness & Setting the Salt

It is recommended that adjustments should be made in accordance with the following scheme:

Softener level	Salt consumption (gram/cycle)	Water Hardness (Clarke)	Regeneration occurs every X programme sequence
H1	0	0-6	N/A
H2	9	7-14	10
H3 (Default)	12	15-21	5
H4	20	22-28	3
H5	30	29-42	2
H6	60	43-69	1

Note: Every cycle with a regeneration operation consumes additional 2.0 litres of water, the energy consumption increases by 0.02 kWh and the programme extents by 4 minutes.

Note: Contact your local water supplier for information on the hardness of your water supply.

Loading the salt into the container

Important Note:

- Only use salt specifically designed for use in dishwashers. Salt not specifically designed for use in a dishwasher, especially table salt, will damage the appliance. Damage caused by using unsuitable salt is not covered under warranty and no liability will be assumed for damage.
- Only fill with salt just before starting one of the complete washing programs.

Refilling the Salt Reservoir

1. Remove the lower basket and then unscrew and remove the cap from the salt container.
2. Place the salt funnel that is provided into the hole and pour approximately 1.5kg of dishwasher salt into the salt container
3. Fill the salt container with water. It is normal for a small amount of water to come out of the salt container.
4. After filling the container, screw the cap tightly back clockwise.
5. Usually, the salt warning indicator light will stop being illuminated within 2-6 days after the salt container has been filled.
6. Immediately commence a wash cycle (we recommend Rapid) to remove any residual salt water from the appliance.

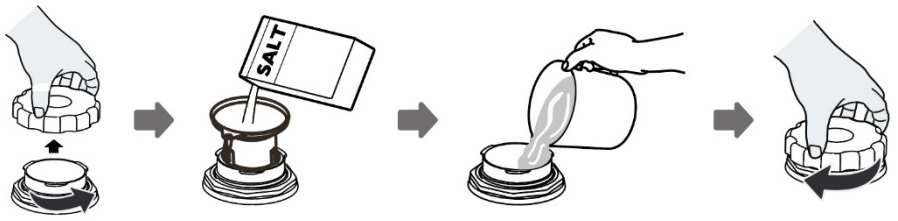

A small amount of water may come out of the container after filling with salt

Note:

- The salt container must only be refilled when the salt warning light on the control panel comes on. Depending on how well the salt dissolves, the salt warning light may still be on even though the salt container is filled.
- If there are spills of salt, a soak or a rapid programme should be run to remove the excessive salt.

Control Panel

Time delay button
Press to select the time you wish to delay the start of the wash programme by in 1 hour increments between 1-24 hours (press after selecting the required programme but prior to pressing the start button).

Start/pause button
Press to start the selected programme or pause the washing programme that is running.

Programme indicator lights
Light to show which programme has been selected.

Salt aid warning & rinse aid warning indicator lights
Light up when the salt container and/or rinse aid dispenser needs to be refilled.

Rinse Aid Dispenser

Rinse Aid Dispenser

The rinse aid is released during the final rinse to prevent water from forming droplets on your dishes, which can leave spots and streaks. It also improves drying by allowing water to roll off the dishes. Your dishwasher is designed to use liquid rinse aids. The rinse aid dispenser is located inside the door next to the detergent dispenser.
To fill the dispenser, open the cap and pour the rinse aid into the dispenser until the level indicator turns completely black. The volume of the rinse aid container is about 110ml

When to Refill the Rinse Aid Dispenser

There is a rinse aid warning indicator light in the control panel which will light up when there is no or little rinse aid in the rinse aid dispenser.

1. To open the dispenser, lift the cover with cover handle.
2. Pour the rinse aid into the dispenser, being careful not to overfill.
3. Press down with your finger to close the cover and ensure it is fully closed.

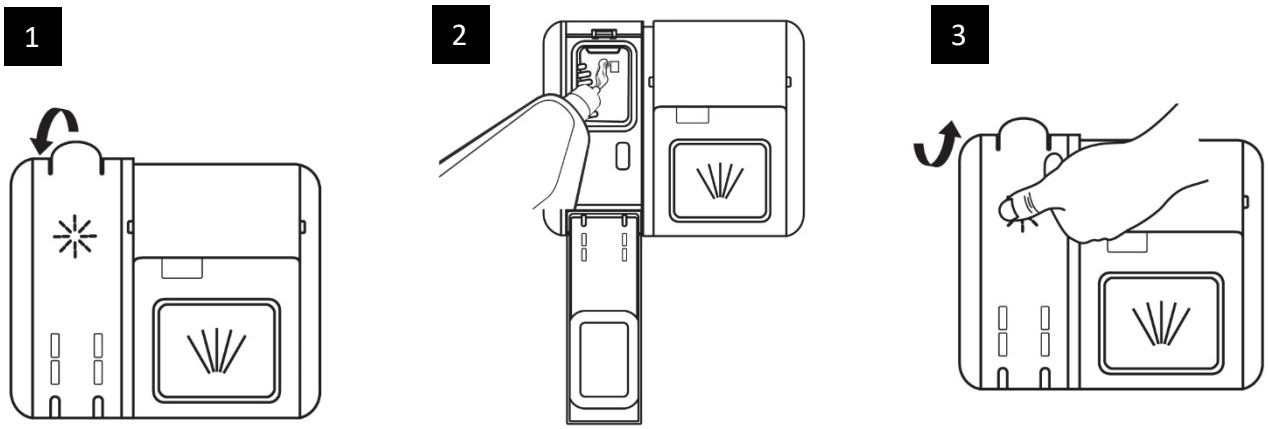

NOTE: Clean up any rinse aid spilled while during filling with an absorbent cloth to avoid excessive foaming during the next wash. Don't forget to replace the cap before you close dishwasher door.

Important note:

Only use branded rinse aid for dishwasher. Never fill the rinse aid dispenser with any other substances (e.g. Dishwasher cleaning agent, liquid detergent). This may damage the appliance.

Rinse Aid Dispenser

The rinse aid dispenser has 5 settings.
Please follow the steps below for adjustment in rinse aid level. The door must be closed to begin setting:

1. Close the door. Within 60 seconds after the appliance is switched on press and hold the 'Program' button for approximately 5 seconds, and then press the 'Delay' button to start the rinse aid setting function. The rinse aid warning light will flash periodically during the setting function. The unit will exit the Rinse Aid setting function if no button is pressed within 5 seconds.
2. Press the 'Program' button to select the required rinse aid level in accordance with usage habit. The display will light up to indicate the different rinse aid levels. The rinse aid levels will change in the following sequence: d3->d4->d5->d1->d2 (d1 is the lowest setting and d5 is the highest setting). The default setting is d3 but increase if performance is not as required
3. After 5 seconds of no operation, the Rinse Aid will be set and the appliance will return to normal operation, or press the 'On/off' button to confirm the rinse aid setting.

Rinse aid setting	Rinse Aid Level
d1	Lowest Setting
d2	Low-Mid Setting
d3 (Default)	Normal Setting
d4	Mid-High Setting
d5	Highest Setting

Note: Increase the rinse aid level if there are drops of water or lime spots on the dishes after washing. Reduce it if there are sticky whitish stains on your dishes or a bluish film on glassware or knife blades.

Detergent

Detergent with its chemical ingredients are necessary to remove dirt, crush dirt and transport it out of the dishwasher.
Important notes:

- **Only use detergent specifically made for use in dishwashers.**
- **Keep your detergent fresh and dry.**
- **Don't put powder detergent into the dispenser until you're ready to wash dishes.**
- **Dishwasher detergent is corrosive! Keep it out of reach of children.**

Detergent

Detergents

There are 3 sorts of detergents:

1. With phosphate and with chlorine
2. With phosphate and without chlorine
3. Without phosphate and without chlorine

Normally new pulverised detergent is without phosphate. Thus the water softener function of phosphate is not given. In this case we recommend to fill salt in the salt container even when the hardness of water is only 7*clarke. If detergents without phosphate are used in the case of hard water often white spots appear on dishes and glasses. In this case please add more detergent to reach better results. Detergents without chlorine do only bleach a little. Strong and coloured spots will not be removed completely. In this case please choose a programme with a higher temperature.

Concentrated Detergent

Based on their chemical composition, detergents can be split into two basic types:

- Conventional, alkaline detergents with caustic components
- Low alkaline concentrated detergents with natural enzymes

Detergent Tablets

Detergent tablets of different brands dissolve at different speeds. For this reason, some detergent tablets cannot dissolve and develop their full cleaning power during short programs. Therefore, please use long programs when using detergent tablets, to ensure the complete removal of detergent residuals.

Detergent Dispenser

The dispenser must be refilled before the start of each wash cycle following the instructions provided in the wash cycle table. Generally, only one tablespoon of detergent is needed for a normal wash load. More heavily soiled items will need more detergent. Always add the detergent just before starting the dishwasher, otherwise it could get damp and will not dissolve properly if added mid cycle.

Detergent

Detergent Dispenser

The detergent dispenser is located on the inside of the dishwasher door and is approximately halfway up the door. The dispenser can be filled with either detergent powder or a detergent tablet in compartment A,.

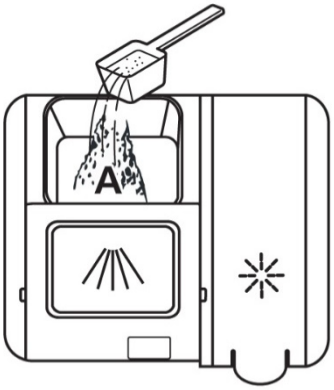

Filling the Detergent Dispenser

Note: observe the dosing and storage recommendations that are stated on the detergent packaging.

1. The detergent dispenser will automatically open during a washing cycle to release the detergent powder or detergent tablet into the appliance. However, should you need to manually open the dispenser you can do this by sliding the latch on the dispenser, the dispenser door will spring open.

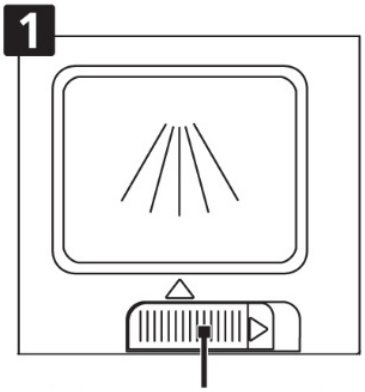

Slide to open

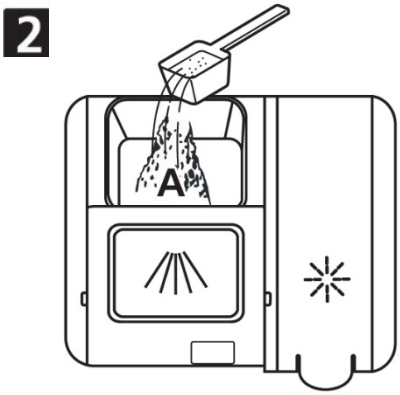

Detergent powder
or detergent tablet

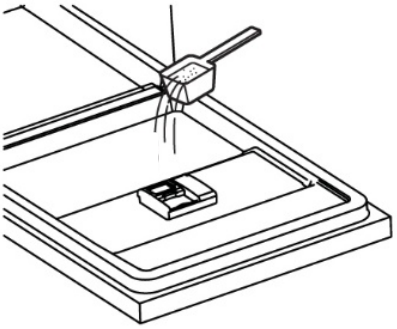

Pre-wash
cycle detergent

Detergent

2. Fill the detergent dispenser with the correct amount of detergent powder or 1 detergent tablet in compartment A.

Information about the amount of detergent for each programme can be located in the programme information section. Please be aware that the amount of detergent that is to be used can be affected by the level soiling of your dishes and the water hardness of the area you live in. Please observe the manufacturer's recommendations on the detergent packaging.

Note:

- **Only use detergent specifically made for use in dishwashers.**
- **Observe the dosing and storage recommendations that are stated on the detergent packaging.**
- **Don't put powder detergent into the dispenser until you're ready to wash dishes.**
- **Dishwasher detergent is corrosive! Keep it out of reach of children**

3. Close the lid and press until it locks in place.

Loading the Dishwasher

Notes:

- **Only purchase and wash utensils which are identified as dishwasher safe.**
- **Use a mild detergent that is described as 'kind to dishes'. If necessary, seek further information from the detergent manufacturers.**
- **Higher temperature programmes may cause damage, always check with the manufacturer for dishwasher suitability.**
- **To prevent damage, do not take glass and cutlery out of the dishwasher immediately after the programme has ended.**

Items not suitable for the dishwasher

- Cutlery with wooden, horn china or mother-of-pearl handles
- Plastic items that are not heat resistant
- Older cutlery with glued parts that are not high temperature resistant
- Bonded cutlery items or dishes
- Pewter or copper items
- Crystal glass
- Steel items are subject to rusting, specifically knife steel.
- Wooden platters
- Items made from synthetic fibres

Items that may not be suitable for the dishwasher

- Some types of glasses can become dull after a large number of washes
- Silver and aluminium may discolour
- Glazed patterns may fade if machine washed frequently

Before Loading the Dishwasher

For best performance of the dishwasher, follow these loading guidelines (features and appearance of baskets and cutlery baskets may vary from your model):

1. Scrape off any large amounts of left over food from dishes/crockery.
2. Soften remnants of burnt food in pans and other crockery by pre-washing.
3. Place objects in the dishwasher in the following way:
    a. Items such as cups, glasses, pots/pans, etc. are faced downwards.
    b. Curved items, or ones with recesses, should be loaded at an angle so that water can run off.
    c. All utensils are stacked securely in the cutlery tray and can not tip over.

Loading the Dishwasher

   d. All utensils are placed in the way that the spray arms can rotate freely during washing.
   e. Load hollow items such as cups, glasses, pans etc. with the opening facing downwards so that water cannot collect in the container or a deep base.
   f. Dishes and items of cutlery must not lie inside one another, or cover each other.
   g. To avoid damage to glasses, they must not touch.
   h. Load large items which are most difficult to clean into the lower basket.
   i. The upper basket is designed to hold more delicate and lighter dishware such as glasses, coffee and tea cups.
   j. Long and/or sharp items of cutlery such as carving knives must be positioned horizontally in the upper basket. Long bladed knives stored in an upright position are a potential hazard!

4. Do not overload your dishwasher. This is important for good results
5. Very small items should not be washed in the dishwasher as they could easily fall off the basket
6. Long items, serving cutlery, salad servers and knives should be placed on the shelf so that they do not obstruct the rotation of the spray arms.
7. Pots, serving bowls, etc. must always be placed top down.
8. Deep pots should be slanted to allow water to flow out.
9. The Bottom Basket features folding spikes so that larger or more pots and pans can be loaded.

Optimal Dishwasher Loading

Loading the Upper Basket

Loading the dishwasher to its full capacity will contribute to energy and water savings. The upper basket is designed to hold more delicate and lighter dishware such as glasses, mugs and tea cups and saucers, as well as plates, small bowls and shallow pans.

Position the dishes and cookware so that they will not get moved by the spray of water.

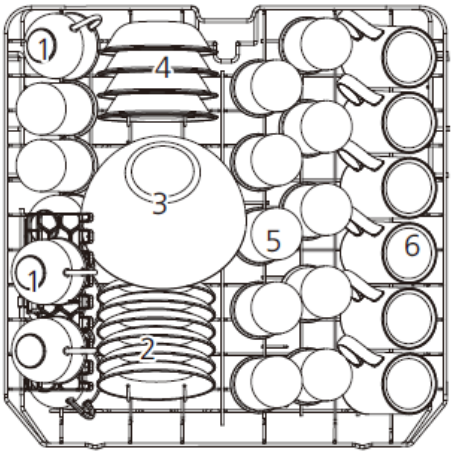

Number	Item
1	Cups
2	Saucers
3	Glass Bowl
4	Dessert Bowls
5	Glasses
6	Mugs

Loading the Lower Basket

Place large items and the most difficult to clean items into the lower basket such as pots, pans, lids, serving dishes and bowls.

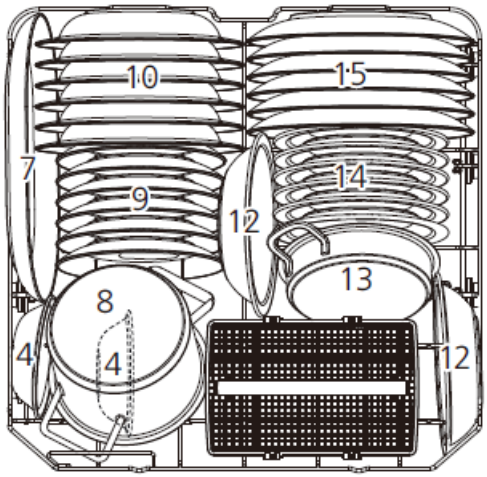

Number	Item
7	Serving Platter
8	Small Pot
9	Dessert Plates
10	Soup Bowls
11	Cutlery Basket
12	Melamine Bowls
13	Oven Pot
14	Melamine Dessert Plates
15	Dinner Plates

Notes:

- **Pots, serving bowls, etc., must always be placed top down**
- **Deep pots should be slanted to allow water to flow out**
- **The lower basket features folding spikes so that larger/more pots and pans can be loaded.**

Optimal Dishwasher Loading

Loading the Cutlery

The cutlery tray is designed to hold smaller utensils, whilst larger items are stored in the cutlery basket.

Position the cutlery as below for optimal cleaning.

IN

1	2	1		4	4	4	4	4	4		1	2	1
2	2	2			8			7		3	3		2
1	2	1		4	4	4	4	4	4		1	3	1
1	2	1		5	5	5	5	5	5		3	3	3
2	2	2			3			3		3	3	3	3
1	2	1		5	5	5	5	5	5		6		6

1	Soup Spoons
2	Forks
3	Knives
4	Teaspoons
5	Dessert Spoons
6	Serving Spoons
7	Serving Fork
8	Gravy Ladle

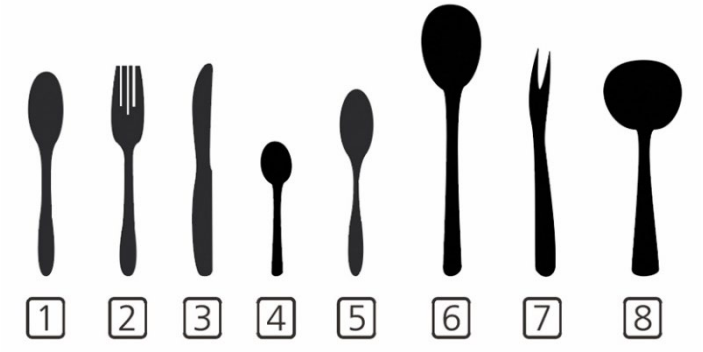

- Capacity: 12 Place Settings
- Upper Basket Position: Fixed Lower Position
- Programme: Eco
- Rinse Aid Setting: Max
- Softener Setting: H3

Information for comparability tests in accordance with EN60436.

Loading the Dishwasher

Folding back the cup shelves

For better stacking of pots and pans, the cup shelves can be folded down as shown in the diagram below. If required, the cup shelves can also be removed. Take care as excessive force can damage and break the shelves.

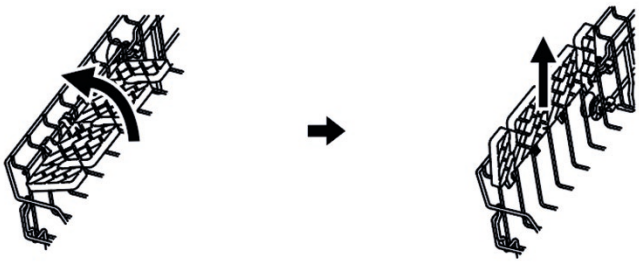

Loading the Dishwasher

Cutlery Basket

Cutlery should be placed in the cutlery basket with the handles at the bottom, except for knives and other utensils with sharp points must be loaded in the basket with their points down or placed in a horizontal position. If the rack has side baskets, the spoons should be loaded separately into the appropriate slots. Long utensils should be placed in the horizontal position at the front of the upper basket as shown in the picture.

For the best cleaning performance place the cutlery in the basket separately, you must make sure that they do not nest/group together.

The compartments of the cutlery basket can be adjusted by folding over the 2 separating covers:

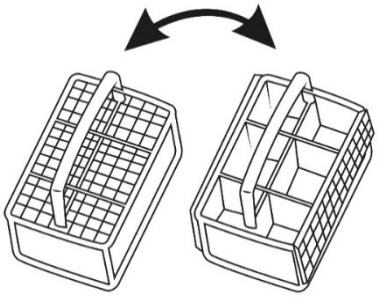

WARNING: Do not let any item extend through the bottom.

Removing the dishes

- It is normal that the dishwasher is wet inside.
- It is recommend to wait for the drying cycle (if the programme that has been selected has this) to finish and for the dishes/crockery to cool before removing them.
- To prevent water dripping from the upper basket into the lower basket, we recommend that you empty the lower basket first and then the upper basket.

Washing Programmes

programme	Cycle information	Cycle stages	Detergent dosage (Pre-wash/Wash)	Running time (mins)	Energy cons. (Kwh)	Water cons. (litres)	Rinse aid required	Delay timer function
Intensive	For heavily soiled crockery and normally soiled pots, pans, glasses and dishes (can be used for dishes with dried on soiling)	Pre-wash (50°C) Wash (65°C) Rinse, Rinse Rinse (72°C) Drying	Powder: 4g/16g or Tablet: 1 or 2	210	1.731	17.8	Yes	Yes
Self-Clean	Used as a cleaning programme for the dishwasher when unloaded	Pre-wash Wash (70°C) Rinse Rinse (70°C)	Powder: 4g/16g or Tablet: 1 or 2	145	1.332	14.6	Yes	Yes
*Eco ECO	For normally soiled loads such as pots, dishes, glasses and lightly soiled pans. This is the most efficient programme for water consumption and energy consumption	Pre-wash Wash (45°C) Rinse (60°C) Drying	Powder: 4g/16g or Tablet: 1 or 2	230	0.923	11.0	Yes	Yes
Glass	For lightly soiled glass and crockery	Pre-wash Wash (50°C) Rinse Rise (65°C) Drying	Powder: 4/16g or Tablet: 1 or 2	120	1.147	14.2	Yes	Yes
Quick 90'	For lightly soiled loads (the load will not be fully dried when programme has finished)	Wash (60°C) Rinse Rinse (65°C) Drying	Powder: 20g or Tablet: 1	90	1.400	11.5	Yes	Yes
Rapid 30'	A quick wash for lightly soiled loads (this programme doesn't have a drying stage so the load will be wet when cycle has finished)	Wash (50°C) Rinse Rinse (45°C)	Powder: 20g or Tablet: 1	30	0.751	11.2	No	Yes

* EN60436.: This programme is the test cycle. The information for comparability test in accordance with EN60436.

Washing Cycles

Turning on the appliance

Starting the wash cycle

1. Pull out the lower and upper basket, load the dishes and push them back. It is recommended to load the lower basket first, then the upper one (see the loading the dishwasher section).
2. Pour in the detergent powder or put in the detergent tablet into the detergent dispenser (see the Detergent section) and close the detergent dispenser cover.
3. Insert the plug into the socket. The power supply must be 220-240 AC / 50 HZ,
4. Make sure that the water supply is turned on to full pressure.
5. Close the door and press the ON/OFF button (the programme indicator & display will light up)
6. Select your required programme by pressing the programme button (the indicator light of the programme you have selected will light up).
7. Press the start button, the machine will beep and the washing cycle will begin.

Change the programme

A cycle that is underway can only be modified if it has only been running for a short time. If the detergent has already been released, and the appliance may have already drained the wash water. If this is the case, the detergent dispenser must be refilled (see the Detergent section).

If you wish to change the programme and it is possible, then press the start/pause button, then press and hold the programme button for more than 3 seconds. The machine will enter the standby state, at this point you can now select the programme you require by pressing the programme button. Once this has been done press the start/pause button and the wash cycle will begin.

Note: If the door is opened during a wash cycle, the machine will pause. The programme indicator light will stop blinking and the beep will sound every minute until the door is closed. If the door is opened without first pressing the Start/Pause button, the programme will automatically resume 10 seconds after the door is closed. If the cycle has been paused using the Start/Pause button before the door is opened, the programme will only resume when the Start/Pause button is pressed again after the door is closed.

Time delay

The starting time of a washing programme can be delayed, please follow the steps below:

1. Open the dishwasher door, load your soiled dishes/crockery, add detergent and then close the door.
2. Press the on/off button to turn on the dishwasher and select your preferred programme.
3. Press the Time Delay button and set the required delay start time (this will be shown in the display).
4. Press the start button, the unit will start the programme at the assigned time automatically.

Washing Cycles

Adding a dish during a cycle
If you have forgotten to load a dish then it can be added at any time before the detergent is dispensed. Please follow the below steps when adding a forgotten dish:

1. Press the Start/Stop button to stop the cycle.
2. After the spray arms stop working, you can open the door completely.
3. Load the forgotten dish or dishes.
4. Close the door and press the Start/Pause button. The dishwasher will start running again after 10 seconds.

Note: It is dangerous to open the door when washing, because the hot water may scald you.

At the end of the wash cycle
When a programme has finished, the beep of the dishwasher will sound for 8 seconds, after this duration it will stop. Turn off the appliance using the ON/OFF button and open the door of the dishwasher. Turn off the water tap if necessary.

Note: The appliance will switch off automatically 15 minutes after the programme has finished.

Open the door carefully
Hot dishes are sensitive to knocks. The dishes therefore must be allowed to cool down for approximately 15 minutes before removing from the appliance. Open the dishwasher door and leave it ajar for approximately 15 minutes before removing the dishes. This allows them to cool and improves drying.

Unloading the dishwasher
It is normal that the dishwasher is wet inside. It is recommended to wait for the drying cycle (if the programme that has been selected has this) to finish and for the dishes/crockery to cool before removing them. To prevent water dripping from the upper basket into the lower basket, we recommend that you empty the lower basket first and then the upper basket.

Maintenance & Cleaning

Filtering System

The filter prevents larger remnants of food or other objects from getting inside the pump. The residue may block the filter, in this case they must be removed.

The filter system consists of a coarse filter, a flat (Main filter) and a micro filter (Fine filter).

2) Coarse Filter
Larger items, such as pieces of bones or glass, that could block the drain are trapped in the coarse filter. To remove the items caught by the filter, remove the whole filter unit by twisting anti-clockwise.

1) Main Filter
Food and soil particles trapped in this filter are pulverized by a special jet on the lower spray arm and washed down the drain.

3) Fine filter
This filter holds soil and food residues in the sump area and prevents it from being redeposited on the dishes wash cycles.

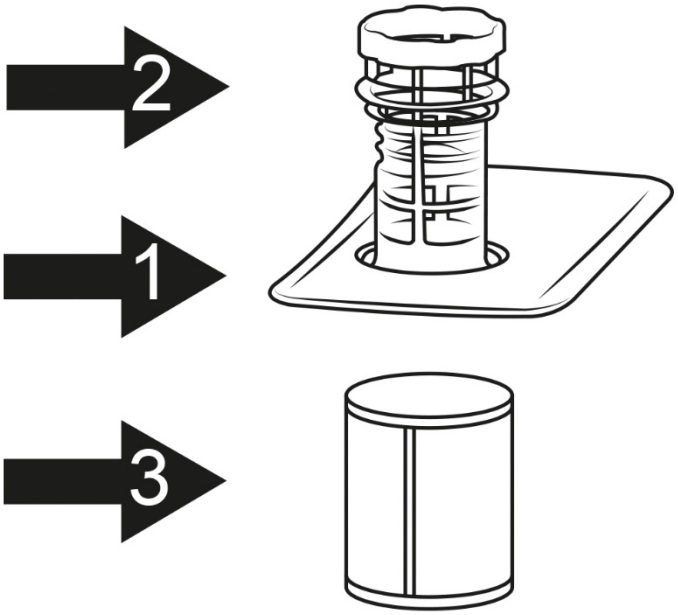

Remove any debris from where the filter was positioned in the dishwasher before replacing.

Filter Assembly

Important notes:

- **The dishwasher must never be used without the filters.**
- **Improper replacement of the filter may reduce the performance level of the appliance and damage dishes and utensils.**

The filter efficiently removes particles of food from the wash water, allowing it to be recycled during the wash cycle. For best performance and cleaning results, the filter must be cleaned regularly. For this reason, it is recommended to remove the larger food particles trapped in the filter after each use by removing all debris from all parts of the filter (you may need to use a cleaning brush to remove all debris from the coarse and fine filters) and rinse all parts of the filter under running water.

Maintenance & Cleaning

To remove the filter, twist the coarse filer (part 2) and pull it in an upwards direction. All parts of the filter will lift away from the bottom of the appliance

1

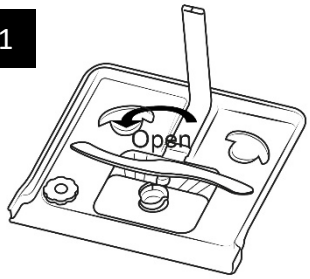

1. Turn the coarse filter (part 2) in an anti-clockwise direction, then pull it in an upwards direction.

2

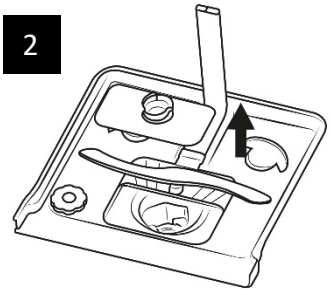

2. The filter system can be removed

3

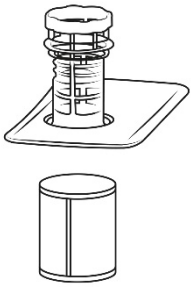

3. To separate all parts of the filter, hold the fine filter (part 3) tightly, twist the coarse filter (part 2) in an anti-clockwise direction and pull it upwards

To replace the filter reverse steps 1, 2 and 3.

Important notes:

- **Inspect the filters for blocking after every use**
- **The filter system must be cleaned at lease once a week**
- **When cleaning the filters, don't knock/tap them. Otherwise, the filters could be contorted and the performance of the dishwasher could be affected.**

Maintenance & Cleaning

Cleaning the door

Important note:
Never use a spray cleaner to clean the door panel as it may damage the door lock and electrical components.
Abrasive agents or some paper towels should not be used because of the risk of scratching or leaving spots on the stainless steel surface.

The control panel can be cleaned by using a lightly dampened cloth. After cleaning, make sure to dry it thoroughly.

Never use sharp objects, scouring pads or harsh cleaners on any part of the dishwasher.

To clean the edge around the door, you should use only a soft warm, damp cloth. To avoid penetration of water into the door lock and electrical components, do not use a spray cleaner of any kind.

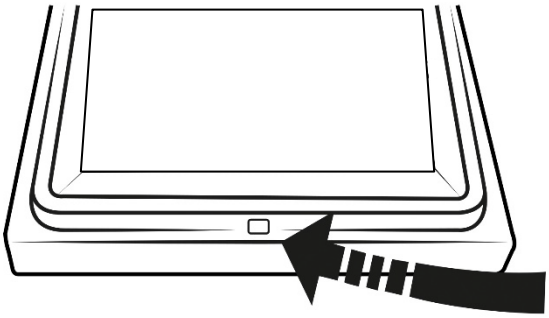

door lock and electrical components

Protect Against Freezing

Important note:
If your dishwasher cannot work because of the ice, please contact professional service persons.

You must take frost protection measures for the dishwasher in winter, if it is used in a cold environment. Every time after washing cycles, please operate as follows.

Maintenance & Cleaning

1. Cut off the electrical power to the dishwasher.
2. Turn off the water supply and disconnect the water inlet pipe from the water valve.
3. Drain the water from the inlet pipe and water valve. (Use a bowl to catch the water)
4. Reconnect the water inlet pipe to the water valve.
5. Remove the filter at the bottom of the tub and use a sponge to soak up water in the sump

Cleaning the Spray Arms

It is necessary to clean the spray arms regularly for hard water chemicals, as these will clog the spray arm jets and bearings.

To remove the upper spray arm, hold the nut, rotate the arm clockwise to remove it.

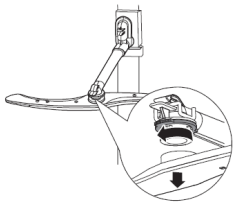

To remove the lower spray arm, pull the spray arm upward.

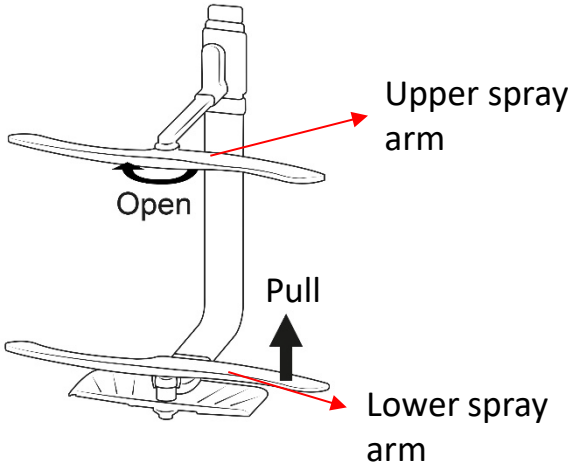

Wash the arms in warm soapy water and use a soft cleaning brush to clean the jets. Replace them after rinsing them thoroughly in clean water

How to Keep your Dishwasher in the Correct Condition

After Every Wash
After every wash, turn off the water supply to the appliance and leave the door slightly open so that moisture and odours are not trapped inside.

Remove the Plug from the socket
Before cleaning or performing maintenance, always remove the plug from the socket.

Maintenance & Cleaning

No Solvents or Abrasive Cleaning
To clean the exterior and rubber parts of the dishwasher, do not use solvents or abrasive cleaning products. Only use a cloth with warm soapy water.

To remove spots or stains from the surface of the interior, use a cloth dampened with water and a little vinegar, or a cleaning product made specifically for dishwashers.

When not in use for a long time
It is recommend that you run a wash cycle with the dishwasher empty and then remove the plug from the socket, turn off the water supply and leave the door of the appliance slightly open. This will help the door seals to last longer and prevent odours from forming within the appliance.

Moving the Appliance
If the appliance must be moved, try to keep it in the vertical position. If absolutely necessary, it can be positioned on its back but cannot be left in this position.

Seals
One of the factors that cause odours to form in the dishwasher is food debris and moisture in the seals. Periodic cleaning these with a damp sponge will prevent this from occurring.

Trouble Shooting

Problem	Causes	Solution
Dishwasher doesn't start	Power supply is not turned on.	Make sure the power cord is properly plugged into the wall socket. Make sure the dishwasher is turned on and the door is closed securely.
	Fuse blown, or the circuit breaker acted.	Replace fuse or reset circuit breaker. Remove any other appliances sharing the same circuit with the dishwasher.
	Water supply is not turned on.	Check that the water supply is connected properly and the water is turned on.
	Water pressure is low.	Check that the water pressure is within the required level, please see water connection section.
	Door of dishwasher not properly closed.	Make sure to close the door properly/full.
	A fault has occurred.	Switch of the appliance by pressing the ON/OFF button , switch it back on after approximately one minute and reset the programme. If this does not work unplug the appliance and leave for 5 minutes, then put the plug back in and turn on the appliance.
Water has not drained for the dishwasher	Wash programme has not finished.	The wash programme may not have finished, close the door and wait for the wash programme to complete in full.
	Drain hose is bent.	Check drain hose.
	Filter clogged/blocked.	Check all parts of the filter and clean if necessary, please see filter section.
	Drains clogged/blocked.	Check the drains to make sure they are draining well. If they aren't you will need to get them unblocked and may need a plumber to do this. If the dishwasher still won't drain then a service engineer may be needed.
The dishwasher does not take any water	There is no water in the mains supply.	Check the water supply has not been cut off or if there is a fault in your area.
	Water inlet pipe is bent.	Water inlet pipe.
	Turn on the water tap and/or valve.	Turn on the water tap/valve and the appliance will start after a few minutes.

Trouble Shooting

Problem	Causes	Solution
Suds in the tub	Improper detergent	Use only the dishwasher detergent to avoid suds. If this occurs, open the dishwasher and let suds evaporate. Pour 1 gallon of cold water to the tub, then close the dishwasher and select any cycle. The first part of the cycle will see the dishwasher drain out the water (you will be able to hear this taking place). When the draining has finished open the door and check if the suds is disappeared. Repeat if necessary.
	Spilled rinse aid	Always wipe up rinse aid spills immediately, because if left in the tub then suds will be produced.
Stained tub interior	Detergent with colourant was used	Make sure that the detergent is the one without colourant.
White film on inside surface	Hard water minerals	To clean the interior, use a damp sponge with dishwasher detergent and wear rubber gloves. Never use any other cleaner than dishwasher detergent for the risk of foaming or suds.
There are rust stains on cutlery	The affected items are not corrosion resistant	Purchase dishwasher safe cutlery or hand wash the cutlery that is dishwasher safe
	A programme was not run after dishwasher salt was added. If this is done then traces of salt will get into the wash cycle and cause corrosion	Always run the quick wash programme after adding dishwasher salt without any crockery in the dishwasher.
	The lid of the water softener is loose	Check the lid and ensure it is fitted correctly and tight.
Knocking noise in the wash cabinet	A spray arm is knocking against an item in a basket	Interrupt the programme, and rearrange the items which are obstructing the spray arm.
Rattling noise in the wash cabinet	Items of crockery are loose in the wash cabinet	Interrupt the programme, and rearrange the items of crockery.
Knocking noise in the water pipes	This may be caused by on-site installation or the cross-section of the piping	This has no influence on the dishwasher function, if in doubt, contact a suitably qualified plumber.

Trouble Shooting

Problem	Causes	Solution
The dishes are not clean	Dishwasher has been overloaded.	Arrange the dishes correctly or wash in 2 separately loads, please see the Loading the Dishwasher section.
	The dishes were not loaded correctly.	Arrange the dishes correct, please see the Loading the Dishwasher section.
	The programme was not powerful enough.	Select a more intensive programme, please see the Wash programme section.
	Not enough detergent was dispensed.	Use more detergent, or change your detergent.
	Too much detergent was dispensed or the incorrect detergent has been used	The detergent has not been measured out correctly or it is not suitable for use in dishwashers.
	Items are blocking the path of spray arms.	Re-arrange the items so that the spray can rotate freely.
	The filter in the base of wash cabinet is not clean or is not correctly fitted. This may cause the spray arm jets to get blocked.	Clean and/or fit the filter correctly. Clean the spray arm jets, please see the Cleaning the Spray Arms section.
	Insufficient dishwasher salt and Rinse aid need to be refilled.	Dishwasher salt and rinse aid need to be refilled, please see the Dishwasher Salt and Rinse Aid sections.
	The lid on the rinse aid dispenser was not shut correctly.	Shut correctly and re-wash.
The dishes and glasses are streaked or have a bluish tinge	The rinse aid dosage is too high.	Reduce the rinse aid dosage.
Cloudiness on glassware	Combination of soft water and too much detergent.	Use less detergent if you have soft water and/or select a shortest cycle to wash the glassware and to get them clean. The Glass Wash programme could be used.
Black or grey marks on dishes	Aluminium utensils have rubbed against dishes.	Use a mild abrasive cleaner to eliminate those marks.
Detergent left in dispenser cups	Dishes block cups or cups incorrectly loaded.	Re-loading the dishes properly.

Trouble Shooting

Problem	Causes	Solution
The dishes are not drying	Improper loading.	Load the dishwasher as suggested in the directions.
	Too little rinse aid.	Increase the amount of rinse aid and/or refill the rinse aid dispenser.
	Dishes are removed too soon.	Do not empty your dishwasher immediately after washing cycle has ended. Open the door slightly so that the steam can escape. Only begin unloading the dishwasher when the dishes are cool to the touch. Empty the low basket first. This prevents water form dropping off dishes in the upper basket.
	Wrong programme has been selected or a programme without a drying cycle.	In short programs the drying time is shorter or the programme won't have a drying cycle at all. Choose a programme with a long washing time.
	The crockery is made from non-stick material or plastic.	Remove from dishwasher and leave to dry or dry with a dish cloth.
	Use of cutlery with a low-quality coating.	Water drainage is more difficult with these items. Cutlery or dishes of this type are not suitable for washing in the dishwasher.

Error codes

Error codes	Meanings	Possible causes
E1	Water inlet problem/fault.	Water intake is restricted or water pressure is too low.
E3	Not reaching required temperature.	Heating element fault.
E4	Overflow.	The dishwasher is leaking.
Ed	PCB fault.	Software or PCB board fault.

Note: If overflow occurs, turn off the main water supply before calling a service engineer. If there is water in the base of the tub because of an overfill or small leak, the water should be removed before restarting the dishwasher.

Connection to the Mains Supply

WARNING- THIS APPLIANCE MUST BE EARTHED

This appliance is designed to operate from a mains supply of AC220V - 240V; 50HZ. Check that the voltage marked on the product corresponds with your supply voltage.

For UK use only – Plug fitting details (where applicable):
As the colours of the wires in the mains lead of this appliance may not correspond with the coloured markings identifying the terminals in your plug, proceed as follows:

The GREEN/YELLOW wire is the EARTH and must be connected to the terminal which is marked with the letter E or by the earth symbol or coloured GREEN or GREEN/YELLOW.

The BLUE wire is the NEUTRAL and must be connected to the terminal marked with the letter N or coloured BLACK.

The BROWN wire is the LIVE wire and must be connected to the terminal marked with the letter L or coloured RED.

Always ensure that the plug cord grip is fastened correctly.

If a 13A (BS1363) fused plug is used it must be fitted with a 13amp fuse conforming to BS1362 and be BSI or ASTA approved.

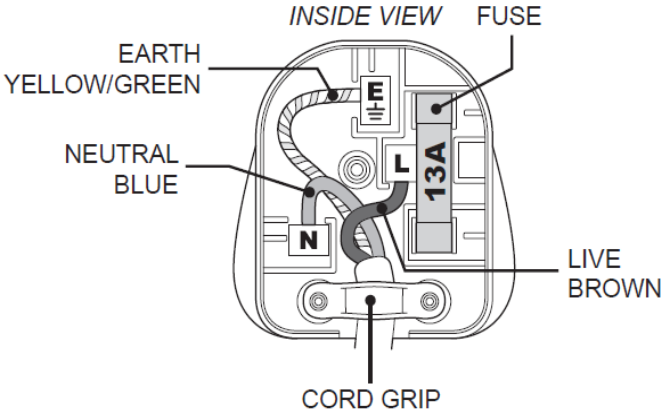

Guarantee

This product is guaranteed for **12 months** from the date of the original purchase. If any defect arises due to faulty materials or workmanship, the faulty product must be returned to the place of purchase.
Refund or replacement is at the discretion of the retailer.

The following conditions apply:
• The product must be returned to the retailer with the original proof of purchase.
• The product must be installed and used in accordance with the instructions contained in this instruction guide and any other instructions for use which are supplied.
• It must be used for domestic purposes only and for its intended use.
• This warranty does not cover wear and tear, damage, misuse or consumable parts.

This does not affect your statutory rights.

Customer Services & Spare Parts:

Region	Contact	Website
UK & Northern Ireland	0345 209 7461	mda.russellhobbs.com
Ireland	1 800 938982	ie.mda.russellhobbs.com
Rest of Europe	europe@productcaregroup.com	de.mda.russellhobbs.com fr.mda.russellhobbs.com es.mda.russellhobbs.com it.mda.russellhobbs.com nl.mda.russellhobbs.com

Product Fiche

Supplier's name or Trade Mark:	Russell Hobbs			
Supplier's Address:	Unit 1, Green Bank Business Park, Wigan, WN2 4AY, UK / Product Care (Ireland) Ltd, Cork, T23 AT2P, Ireland			
Model Identifier:	RH60DW00E2 W/B/SS/DS			
Product Type	Dishwasher			
	Value		**Value**	
Rated Capacity / Number of Place Settings for the standard cleaning cycle	12	**Dimensions (cm)**	**Height**	85.0
			Width	60.0
			Depth	60.0
		Net Weight (kg)	43	
Rated Voltage	AC220V-240V / 50Hz	**Rated Power**	1760-2100W	
EEI	55.9	**Energy Efficiency Class**	E	
Cleaning performance index	1.121	**Drying performance index****	1.061	
Energy consumption in kWh [per cycle], based on the eco programme using cold water fill. Actual energy consumption will depend on how the appliance is used.	0.923	**Water consumption in litres [per cycle], based on the eco programme. Actual water consumption will depend on how the appliance is used and on the hardness of the water.**	11.0	
Programme duration (h:min)	3:50	**Design Type**	Freestanding	
Airborne acoustical emissions (dB)	49	**Airborne acoustical noise emission class**	C	
Off-mode (W)	N/A	**Standby mode (W)**	0.49	
Delay start (W) (if applicable)	3.99	**Networked standby (W) (if applicable)**	N/A	
Minimum duration of the guarantee offered by the supplier:		12 months		
Weblink to the supplier's website, where the information in point 6 of Annex II to Commission Regulation (EU) 2019/2022:		mda.russellhobbs.com		

Russell Hobbs

Made by Product Care Trading Limited under license from Spectrum Brands (UK) Limited. Product Care Trading Ltd, Unit 1, Green Bank Business Park, Swan Lane, Hindley Green, Wigan, WN2 4AY, United Kingdom

Product Care (Ireland) Ltd, Unit 3D North Point House, North Point Business Park, New Mallow Road, Cork, T23 AT2P, Ireland.
Russell Hobbs is the registered trademark of Spectrum Brands (UK) Ltd.

Enabling responsible supply chains

The ‘wheelie bin’ symbol is known as the 'Crossed-out wheelie bin Symbol'. When this symbol is marked on a product/batteries, it means that the product/batteries should not be disposed of with your general household waste. Only discard electrical/electronic/battery items in separate collection schemes, which cater for the recovery and recycling of materials contained within. Your co-operation is vital to ensure the success of these schemes and for the protection of the environment. For your nearest disposal facility, visit www.recycle-more.co.uk or ask in store for details.

SEDEX – Connecting businesses and their global suppliers to share ethical data and enabling improvement in ethical performance. Visit www.sedex.org.uk for further information.

We reserve the right, due to possible changes to design, to alter the instruction manual without prior notice.

Revision 1.4