BUSH

Instruction Manual

Electrical Double Oven

DHBEDC50B

DHBEDC50W

You'll soon be enjoying your new Cooker.

It all begins here, with your instructions. Don't worry, there's nothing too technical coming up. Just simple, step-by-step guidance to get you up and running quickly. Sound good? Then let's get started.

Help and Guidance

We're here to help you get the most from your Electrical Cooker. Should you require any guidance, a simple solution can often be found online at:

www.argos-support.co.uk

If you still require further assistance, call one of our experts on **0345 257 7271.**

If you require any technical guidance or find that your product is not operating as intended, a simple solution can often be found in the **Troubleshooting** section of these instructions,

Contents

Sub heading

1 Safety information

Safety information 6

2 Getting to know your cooker

Ready? Let's begin 12

Product features 13

Control panel

3 Installing your cooker

Installatıon and preparatıon for use 16

Electrical connection and safety 17

Anti-tilting kit 18

Adjusting the feet 19

4 Functions

Hob controls 22

Main oven functions 23

Top oven functions 23

Use of the digital touch timer 24

5 Using your Cooker

Accessories 30

Energy fiche 31

6 Care and Maintenance

Cleaning 36

Maintenance 37

7 Product support

Troubleshooting 40

Transport 40

Help and assistance 41

Information about transportation 42

Disposal 42

Guarantee 43

Safety information 1

Safety information

Important - Please read these instructions fully before installing or operating

- Carefully read all instructions before using your appliance and keep them in a convenient place for reference when necessary.
- This manual has been prepared for more than one model therefore your appliance may not have some of the features described within. For this reason, it is important to pay particular attention to any figures whilst reading the operating manual.

General safety warnings

- This appliance can be used by children aged from 8 years and above and by persons with reduced physical, sensory or mental capabilities or lack of experience and knowledge if they have been given supervision or instruction concerning use of the appliance in a safe way and understand the hazards involved. Children should not play with the appliance. Cleaning and user maintenance should not be made by children without supervision.

WARNING: The appliance and its accessible parts become hot during use. Care should be taken to avoid touching heating elements. Keep children less than 8 years of age away unless they are continually supervised.

WARNING: Unattended cooking on a hob with fat or oil can be dangerous and may result in fire. NEVER try to extinguish such a fire with water, but switch off the appliance and cover the flame with a lid or a fire blanket.

WARNING: Danger of fire: Do not store items on the cooking surfaces.

WARNING: If the surface is cracked, switch off the appliance to avoid the possibility of electric shock.

- For models which incorporate a hob lid, clean any spillages off the lid before use and allow the cooker to cool before closing the lid.
- Do not operate the appliance with an external timer or separate remote-control system.

WARNING: To prevent the appliance tipping, the stabilising brackets must be installed. (For detailed information refer to the anti-tilting kit set guide.)

- During use the appliance will get hot. Care should be taken to avoid touching heating elements inside the oven.
- Handles may become hot after a short period of time during use.
- Do not use harsh abrasive cleaners or scourers to clean oven surfaces. They can scratch the surfaces which may result in shattering of the door glass or damage to surfaces.
- Do not use steam cleaners to clean the appliance.

WARNING: To avoid the possibility of electric shocks, make sure that the appliance is switched off before replacing the lamp.

CAUTION: Accessible parts may be hot when cooking or grilling. Keep young children away from the appliance when it is in use.

- Your appliance is produced in accordance with all applicable local and international standards and regulations.
- Maintenance and repair work should only be carried out by authorised service technicians. Installation and repair work that is carried out by unauthorised technicians may be dangerous. Do not alter or modify the specifications of the appliance in any way. Inappropriate hob guards can cause accidents.
- Before connecting your appliance, make sure that the local distribution conditions (nature of the gas and gas pressure or electricity voltage and frequency) and the specifications of the appliance are compatible. The specifications for this appliance are stated on the label.
- **CAUTION:** This appliance is designed only for cooking food and is intended for indoor domestic household use only. It should not be used for any other purpose or in any other application, such as for non-domestic use, in a commercial environment or for heating a room.
- Do not use the oven door handles to lift or move the appliance.
- All possible measures have been taken to ensure

If you require any technical guidance or find that your product is not operating as intended, a simple solution can often be found in the **Troubleshooting** section of these instructions,

Safety information

Important - Please read these instructions fully before installing or operating

your safety. Since the glass may break, care should be taken while cleaning to avoid scratching. Avoid hitting or knocking the glass with accessories.

- Make sure that the supply cord is not trapped or damaged during installation. If the supply cord is damaged, it must be replaced by the manufacturer, its service agent or similarly qualified persons in order to prevent a hazard.
- Do not let children climb on the oven door or sit on it while it is open.
- Please keep children and animals away from this appliance.

Installation warnings

- Do not operate the appliance before it is fully installed.
- The appliance must be installed by an authorised technician. The manufacturer is not responsible for any damage that might be caused by incorrect placement and installation by unauthorised people.
- When the appliance is unpacked, make sure that it has not been damaged during transportation. In the case of a defect, do not use the appliance and contact a qualified service agent immediately. The materials used for packaging (nylon, staplers, styrofoam, etc.) may be harmful to children and they should be collected and removed immediately.
- Protect your appliance from the atmosphere. Do not expose it to sun, rain, snow, dust or excessive humidity.
- Materials around the appliance (i.e. cabinets) must be able to withstand a minimum temperature of 100°C.

During use

- When you first use your oven you may notice a slight smell. This is perfectly normal and is caused by the insulation materials on the heater elements. We suggest that, before using your oven for the first time, you leave it empty and set it at maximum temperature for 45 minutes. Make sure that the environment in which the product is installed is well ventilated.
- Take care when opening the oven door during or after cooking. The hot steam from the oven may cause burns.
- Do not put flammable or combustible materials in or near the appliance when it is operating.
- Always use oven gloves to remove and replace food in the oven.

Do not leave the cooker unattended when cooking with solid or liquid oils. They may catch fire under extreme heating conditions. Never pour water on to flames that are caused by oil, instead switch the cooker off and cover the pan with its lid or a fire blanket.

- Always position pans over the centre of the cooking zone, and turn the handles to a safe position so they cannot be knocked.
- If the product will not be used for a long period of time, turn the main control switch off. Turn the gas valve off when gas appliances are not in use.
- Make sure the appliance control knobs are always in the "**0**" (stop) position when the appliance is not in use.
- The trays incline when pulled out. Take care not to spill or drop hot food when removing it from the oven.
- Do not place anything on the oven door when it is open. This could unbalance the oven or damage the door.
- Do not place heavy or flammable items (e.g. nylon, plastic bags, paper, cloth, etc.) into the drawer. This includes cookware with plastic accessories (e.g. handles).

CAUTION: The inside surface of the storage compartment may get hot when the appliance is in use. Avoid touching the inside surface.

- Do not hang towels, dishcloths or clothes from the appliance or its handles.

Safety information

Important - Please read these instructions fully before installing or operating

During cleaning and maintenance

- Make sure that your appliance is turned off at the mains before carrying out any cleaning or maintenance operations.
- Do not remove the control knobs to clean the control panel.
- To maintain the efficiency and safety of your appliance, we recommend you always use original spare parts and to call our authorised service agents when needed.

CE Declaration of conformity

We declare that our products meet the applicable European Directives, Decisions and Regulations and the requirements listed in the standards referenced.

This appliance has been designed to be used only for home cooking. Any other use (such as heating a room) is improper and dangerous.

The operating instructions apply to several models. You may notice differences between these instructions and your model.

If you require any technical guidance or find that your product is not operating as intended, a simple solution can often be found in the **Troubleshooting** section of these instructions,

Safety information

Important - Please read these instructions fully before installing or operating

Getting to know your Cooker 2

Getting to know your Electrical cooker

You'll be up and running in no time

Ready? Let's begin...

Please read these instructions carefully. They contain important information which will help you get the best from your Cooker and ensure safe and correct installation and operation.

If you require any further assistance, our technical experts are happy to help. For full details, refer to the product support section at the end of these instructions.

If you require any technical guidance or find that your product is not operating as intended, a simple solution can often be found in the **Troubleshooting** section of these instructions,

Getting to know your Electrical cooker

You'll be up and running in no time

Product features

Important: Specifications for the product vary and the appearance of your appliance may differ from that shown in the figures below.

Accessorries

The Wire Grid

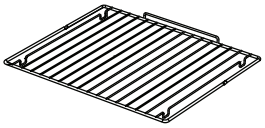

The Deep Tray, Wire Grid and Handle Set

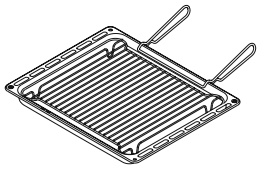

List of components

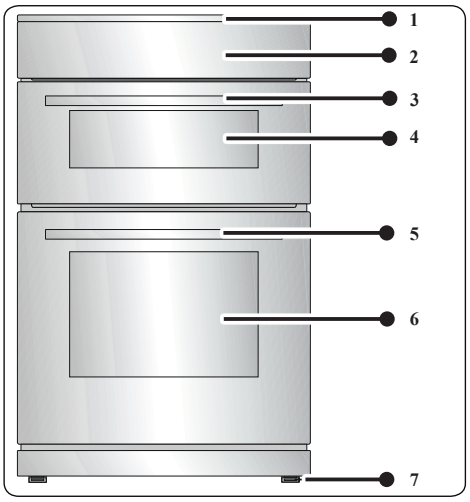

1. Cooktop
2. Control Panel
3. Top Oven Door Handle
4. Top Oven Door
5. Main Oven Door Handle
6. Main Oven Door
7. Adjustable Feet

Control panel

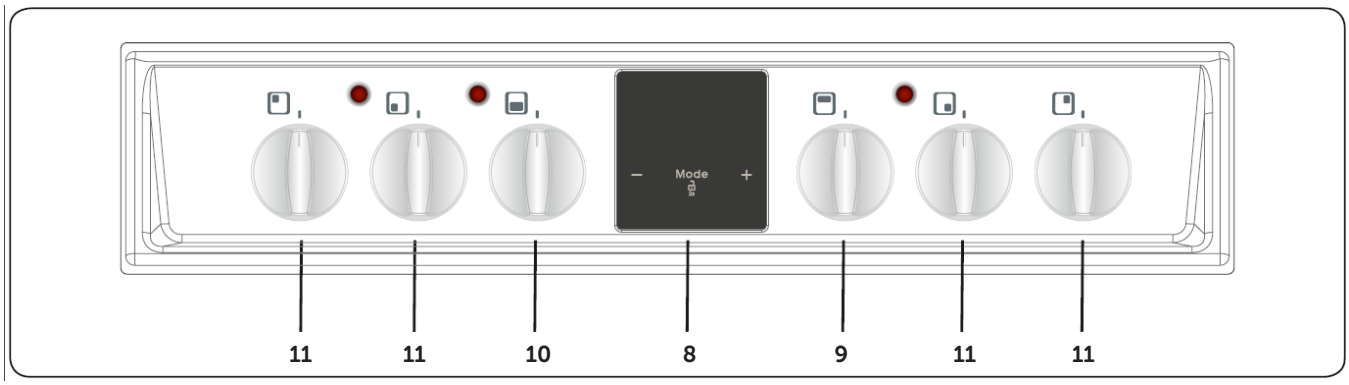

8. Timer
9. Top oven control knob
10. Main oven control knob
11. Hob control knob

or online at **www.argos-support.co.uk** If you still require further assistance, call one of our experts on **0345 257 7271.**

Installing your Cooker 3

Installing your Electrical cooker

Bringing it all together

Installation and preparation for use

WARNING : This appliance must be installed by an authorised service person or qualified technician, according to the instructions in this guide and in compliance with the current local regulations.

- Incorrect installation may cause harm and damage, for which the manufacturer accepts no responsibility and the warranty will not be valid.
- Prior to installation, ensure that the local distribution conditions (electricity voltage and frequency and/or nature of the gas and gas pressure) and the adjustments of the appliance are compatible. The adjustment conditions for this appliance are stated on the label.
- The laws, ordinances, directives and standards in force in the country of use are to be followed (safety regulations, proper recycling in accordance with the regulations, etc.).

Instructions for the Installer

General instructions

- After removing the packaging material from the appliance and its accessories, ensure that the appliance is not damaged. If you suspect any damage, do not use it and contact an authorised service person or qualified technician immediately.
- Make sure that there are no flammable or combustible materials in the close vicinity, such as curtains, oil, cloth etc. which may catch fire.
- The worktop and furniture surrounding the appliance must be made of materials resistant to temperatures above 100°C.
- The appliance should not be installed directly above a dishwasher, fridge, freezer, washing machine or clothes dryer.
- The appliance can be placed close to other furniture on condition that, in the area where the appliance is set up, the furniture's height does not exceed the height of the cooktop.

Installation of the cooker

- If the kitchen furniture is higher than the cooktop, the kitchen furniture must be at least 10 cm away from the sides of appliance for air circulation.
- There should be a minimum 2cm blank space around the appliance for air circulation.
- If a cooker hood or cupboard is to be installed above the appliance, the safety distance between cooktop and any cupboard/cooker hood should be as shown below.

A (mm)	420
B (mm) Cooker Hood/Cupboard	650/700
C (mm)	20
D (mm)	Product Width
E (mm)	50

If you require any technical guidance or find that your product is not operating as intended, a simple solution can often be found in the **Troubleshooting** section of these instructions,

Installing your Electrical cooker

Bringing it all together

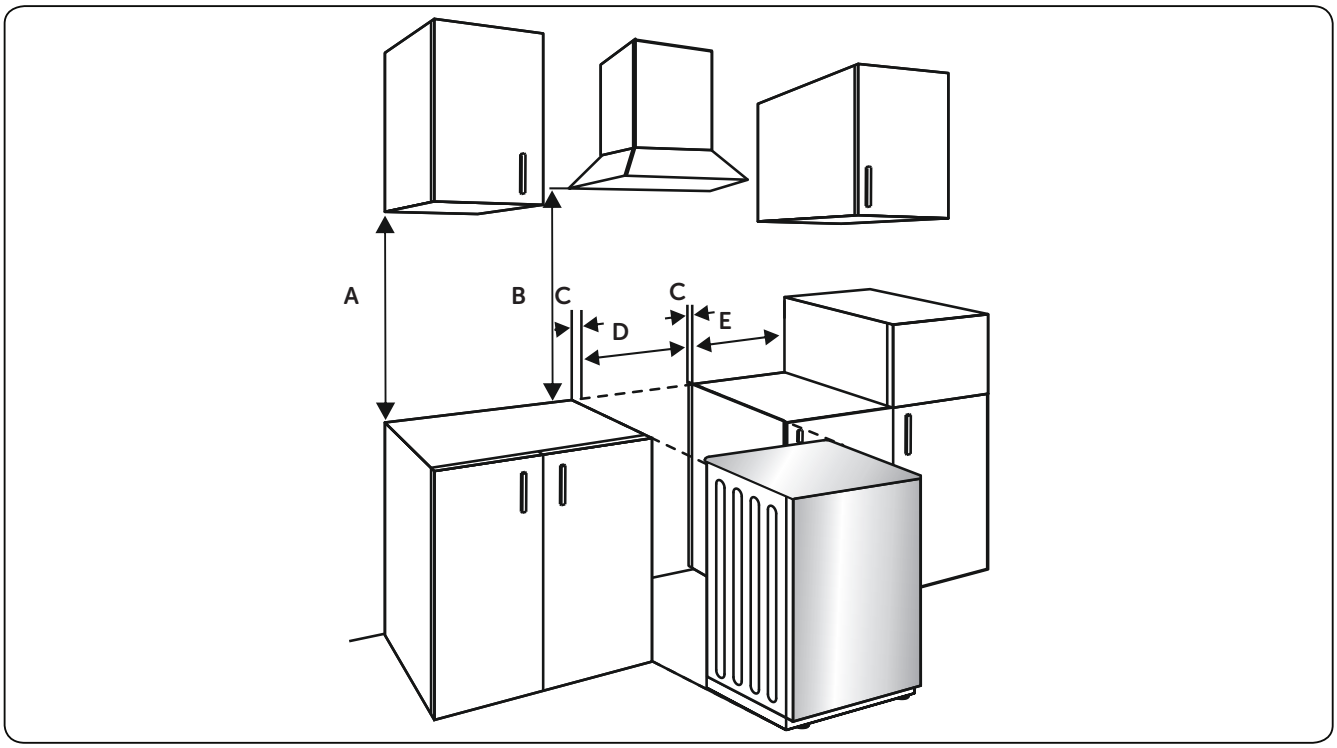

Electrical connection and safety

WARNING: The electrical connection of this appliance should be carried out by an authorised service person or qualified electrician, according to the instructions in this guide and in compliance with the current local regulations.

WARNING: THE APPLIANCE MUST BE EARTHED.

- Before connecting the appliance to the power supply, the voltage rating of the appliance (stamped on the appliance identification plate) must be checked for correspondence to the available mains supply voltage, and the mains electric wiring should be capable of handling the appliance's power rating (also indicated on the identification plate).
- During installation, please ensure that isolated cables are used. An incorrect connection could damage your appliance. If the mains cable is damaged and needs to be replaced this should be done by a qualified personnel.
- Do not use adaptors, multiple sockets and/or extension leads.
- The supply cord should be kept away from hot parts of the appliance and must not be bent or compressed. Otherwise the cord may be damaged, causing a short circuit.
- If the appliance is not connected to the mains with a plug, a multi-pole isolator switch (with at least 3 mm contact spacing) must be used in order to meet the safety regulations.
- The appliance is designed for a power supply of 220-240 V~. If your supply is different, contact the authorized service personnel or qualified electrician.
- The power cable (H05VV-F) must be long enough to be connected to the appliance.
- The fused switch must be easily accessible once the appliance has been installed.
- Ensure all connections are adequately tightened.
- Fix the supply cable in the cable clamp and then close the cover.
- The terminal box connection is placed on the terminal box.

Installing your Electrical cooker

Bringing it all together

- Green/Yellow (Earth) wire to the terminal marked "PE".
- Brown (Live) wire to the terminal marked "L".
- Blue (Neutral) wire to the terminal marked "N".
- For this connection, a 'Twin and Earth 6242Y' type cable should be used.

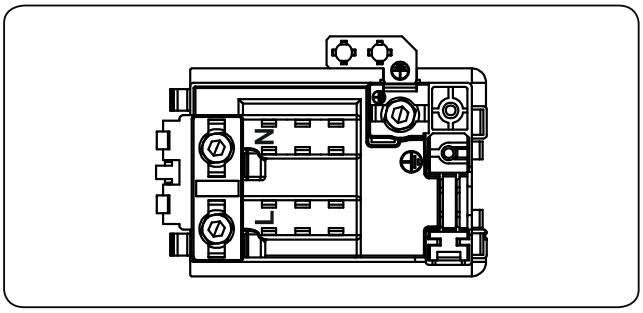

Anti-tilting kit

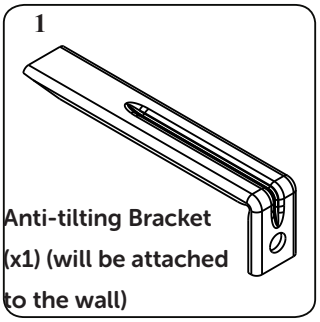

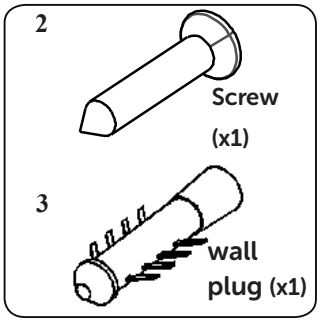

The document bag contains an anti-tilting kit. Loosely attach the anti-tilting bracket (1) to the wall using the screw (2) and wall plug (3), following the measurements shown in the figure and table below. Adjust the height of the anti-tilting bracket so that it lines up with the slot on the cooker and tighten the screw. Push the appliance towards the wall making sure that the anti-tilting bracket is inserted into the slot on the rear of the appliance.

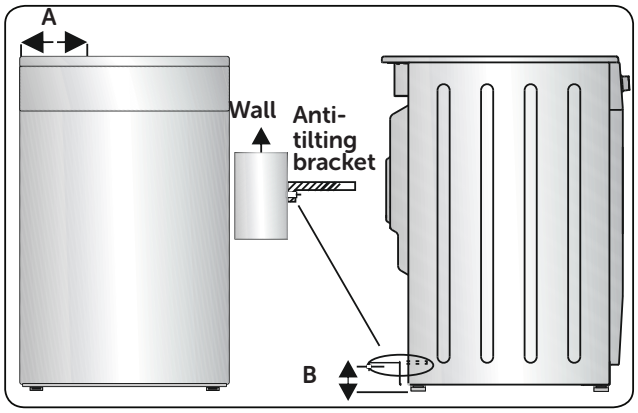

Product Dimensions (Width X Depth X Height) (Cm)	A (mm)	B (mm)
60x60x90 (Double Oven)	297.5	52
50x60x90 (Double Oven)	247.5	52
90x60x85	430	107
60x60x90	309.5	112
60x60x85	309.5	64
50x60x90	247.5	112
50x60x85	247.5	64
50x50x90	247.5	112
50x50x85	247.5	64

If you require any technical guidance or find that your product is not operating as intended, a simple solution can often be found in the **Troubleshooting** section of these instructions,

Installing your Electrical cooker

Bringing it all together

Adjusting the feet

Your product stands on four adjustable feet. For safe operation, it is important that your appliance is correctly balanced. Make sure the appliance is level prior to cooking. To increase the height of the appliance, turn the feet anti-clockwise. To decrease the height of the appliance, turn the feet clockwise.

It is possible to raise the height of the appliance up to 30 mm by adjusting the feet. The appliance is heavy and we recommend that a minimum of 2 people lift it. Never drag the appliance.

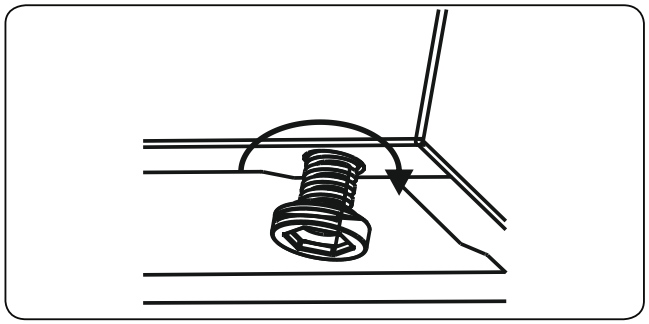

4 Functions

Functions

Simple everyday use

Hob controls

Ceramic heater

The ceramic heater is controlled by a 6 position knob.

The ceramic heater is operated by turning the control knob to the required setting. Near each control knob is a symbol which indicates the heater that is controlled by that knob. The on/off light on the control panel will show if any of the ceramic heaters are in use.

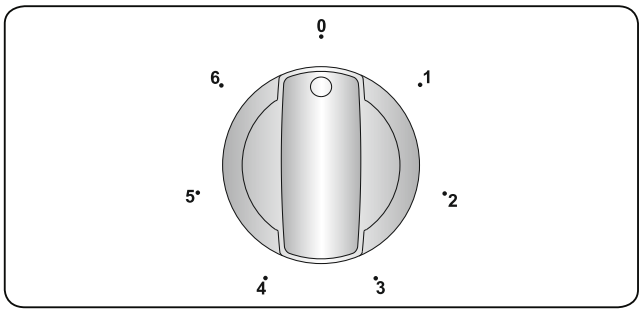

Knob Position	Function
0	Off position
1	Keep warm position
2-3	Heating position at low heat
4-5-6	Cooking, roasting and boiling position

Important: The knob rotation direction may differ according to the product specification.

Dual and oval heaters (if available)

Dual and oval heaters have two heating zones. To activate the outer zone of a dual/oval heater, turn the knob to ◎ position. Both outer zones will switch on.

To deactivate the outer zone of a dual/oval heater, turn the knob to the 'Off' position. Both outer zones will switch off.

Residual heat indicator (if available)

After using the hob there will be heat stored in the vitroceramic glass called residual heat. If the residual heat level is greater than +60°C, the residual heat indicator will be active for the cooking zone which is above this temperature.

If the power supply to the hob is disconnected while the residual heat indicator is on, the warning light will flash when the power is reconnected. The display will flash until the residual heat has decreased or until one of the cooking zones is activated.

Hints and tips

Important: When ceramic heaters are operated in higher heat settings, the heated areas may be seen switching on and off. This is due to a safety device which prevents the glass from overheating. This is normal at high temperatures, causing no damage to the hob and little delay in cooking times.

WARNING:

- Never operate the hob without pans on the cooking zone.
- Use only flat saucepans with a sufficiently thick base.
- Make sure the bottom of the pan is dry before placing it on the hob.
- While the cooking zone is in operation, it is important to ensure that the pan is centred correctly above the zone.
- In order to conserve energy, never use a pan with a different diameter to the hotplate being used.

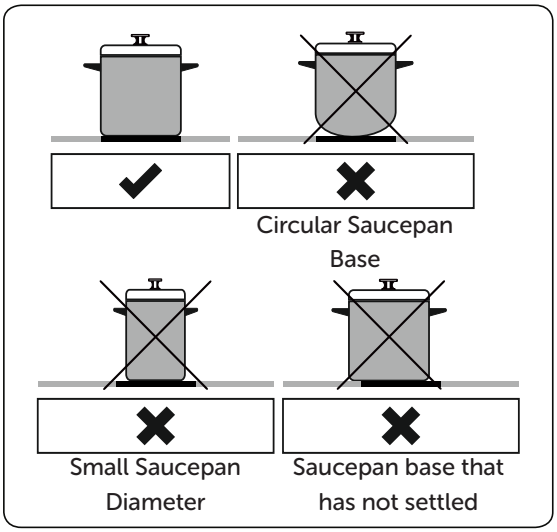

- Do not use pans with rough bottoms since these

Functions

Simple everyday use

can scratch the glass ceramic surface.

- If possible, always place lids on the pans.
- The temperature of accessible parts may become high while the appliance is operating. Keep children and animals well away from the hob during operation and until it has fully cooled after operation.
- If you notice a crack on the cooktop, it must be switched off immediately and replaced by authorised service personnel.

Main oven functions

* The functions of your oven may be different due to the model of your product.

Defrost function: Switch on the DEFROST function using the main oven function control knob. The oven's warning lights will switch on, and the fan will start operating. To use the defrost function, place your frozen food on a shelf in the middle of the oven. It is recommended that you put an oven tray under the defrosting food to catch accumulated water due to melting ice. This function will not cook or bake your food, it will only help to defrost it.

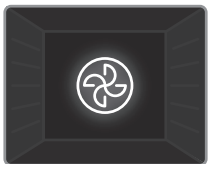

Turbo function: Switch on the TURBO function using the main oven function control knob. The oven's thermostat and warning lights will switch on, and the ring heating element and fan will start operating. The temperature can be adjusted using the main oven function control knob. The turbo function evenly disperses the heat in the oven so all food on all racks will cook evenly. It is recommended that you preheat the oven for 10 minutes.

Top oven functions

* The functions available on your oven may differ from those listed below depending on the model purchased.

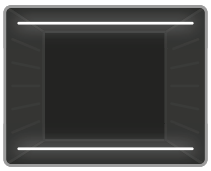

Static Cooking Function: Switch on the STATIC function using the top oven function control knob. The oven thermostat and warning lights will illuminate, and the upper and lower heating elements will switch on. The temperature can be adjusted using the top oven function control knob. The heat generated by the upper and lower heating elements ensures that food is cooked evenly. You will find this setting ideal for cooking cakes, baked pasta, lasagne, and pizza. We recommend that the oven is preheated for 10 minutes before use and that you cook on one rack at a time.

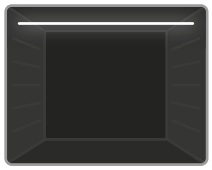

Upper Heating Function: Switch on the UPPER function using the top oven function control knob. The oven thermostat and warning lights will illuminate, and the upper heating element will switch on. The temperature setting will set to the highest level for this function. The UPPER heating function is ideal for heating food or for frying the top of food that has already been cooked, as the heat radiates from the upper heating element closest to the top of the food.

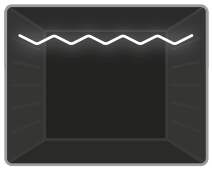

Grilling Function: Switch on the GRILL function using the top oven function control knob. The oven thermostat and warning lights will illuminate, and the grill heating element will switch on. Use this function for grilling. When you have finished grilling, switch the top oven off. Keep children away from the oven during grilling and until it has fully cooled after use.

Warning: The top oven door must be fully open when this function is selected.

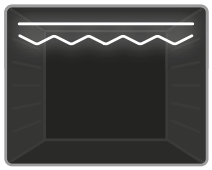

Faster Grilling Function: Switch on the FASTER GRILL function using the function selector knob. The oven thermostat and warning lights will illuminate, and the grill and upper heating elements will switch on. Use this function for wide area grilling. When you have finished grilling, switch the top oven off. Keep children away from the oven during grilling and until the oven has fully cooled after use.

Warning: The top oven door must be fully open when this function is selected.

Functions

Simple everyday use

Use of the Digital Touch Timer

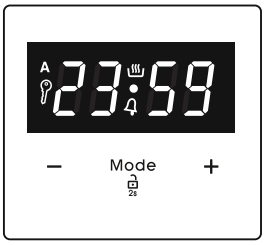

Function Description	
A	Auto cooking
	Manual cooking
	Key Lock
	Minute minder
Mode	Mode function
–	Decrease timer
+	Increase timer
23 59	Timer display

Time adjustment

The time must be set before you start using the oven. Following the power connection, the symbol **"A"** and **"00:00"** or **"12:00"** will flash on the display.

1. Press the **"MODE"** for 2 sec to deactive keylock and the dot in the middle of the screen will start to flash.

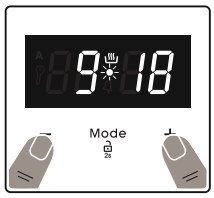

2. Adjust the time while the dot is flashing using the **"+"** and **"-"** keys.

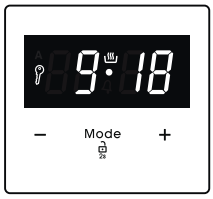

3. After a few seconds, the dot will stop flashing and will remain illuminated.

Key Lock

The key lock automatically activates after the timer has not been used for 5 seconds. **" "** symbol will appear and remain illuminated. To unlock the timer buttons, press and hold the **"MODE"** button for 2 seconds. The desired operation can then be carried out.

Audible warning time adjustment

The audible warning time can be set to any time between **"00:00"** and **"23:59"** hours. The audible warning time is for warning purposes only. The oven will not be activated with this function.

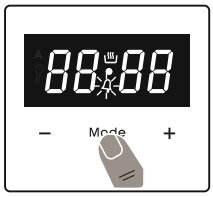

1. Press **"MODE".** The symbol "" will begin to flash and **"000"** will be displayed.

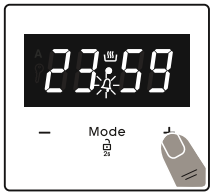

2. Select the desired time period using the **"+"** and **"-"** keys while **""** is flashing.

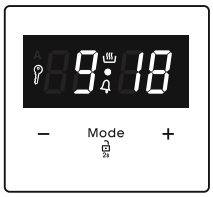

3. The symbol **""** will remain illuminated, the time will be saved and the warning will be set.

If you require any technical guidance or find that your product is not operating as intended, a simple solution can often be found in the **Troubleshooting** section of these instructions,

Functions

Simple everyday use

When the timer reaches zero, an audible warning will sound and the symbol **"🔔"** will flash on the display. Press any key to stop the audible warning. Press **"MODE"** for 2 seconds the **"🔔"** symbol will disappear and the clock will be displayed.

Semi-automatic time adjustment (cooking period)

This function helps you to cook for a fixed period of time. A time range between 0 and 10 hours can be set. Prepare the food for cooking and put it in the oven.

1. Select the desired cooking function and the temperature using the control knobs.

2. Press **"MODE"** until you see **"dur"** symbol on the display screen. The symbol **"A"** will flash.

3. Select the desired cooking time period using the **"+"** and **"-"** keys.

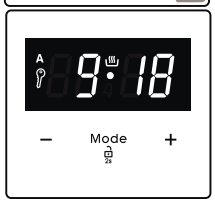

4. The current time will reappear on the screen, and the symbols **"A"**, and "♨" will remain illuminated.

When the timer reaches zero, the oven will switch off and an audible warning will sound. The symbols **"A"** will flash. Turn both control knobs to the **"0"** position and press any key on the timer to stop the warning sound. Press **"MODE"** for 2 seconds the "A" symbol will disappear and the timer will switch back to manual function.

Sound Adjustment

Press and hold the **"-"** sensor button until you hear an audible 'beep' sound. After this, each time the **"-"** button is pressed, a different **"beep"** tone will sound. There are four different types of signal sounds. If **"off"** is selected, all sounds will be turned off except alarm and error sounds press any buttons. After a short time the selected beep will be recorded.

Mode	Electricity consumption	Time to switch into mode
Standby Mode	0.8 W	User actions is required to enter the Standby Mode. To enter the Standby Mode, user sets the cooking function and temperature to OFF and all time for cooking set to 0.

Using your Electrical cooker

5

Using your Electrical cooker

Getting the most from your appliance

Accessorries

The wire grid

The wire grid is best used for grilling or for processing food in oven-friendly containers.

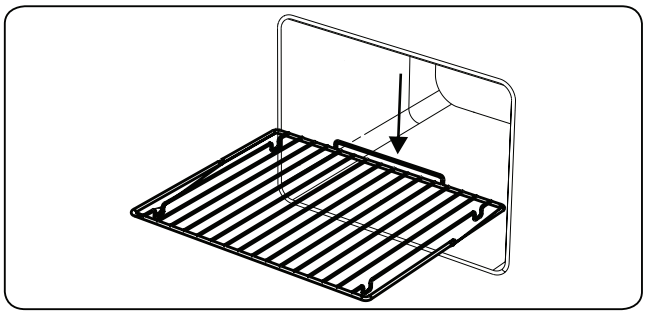

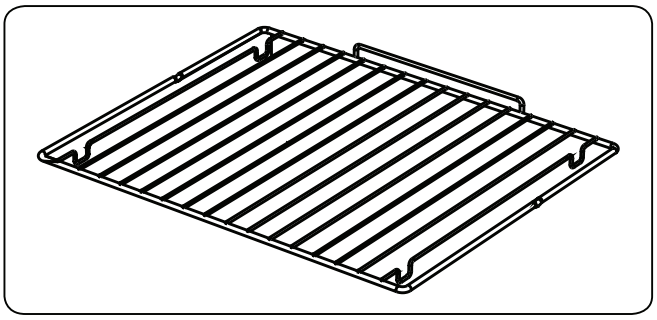

The Deep Tray, Wire Grid and Handle Set

The grill pan set is best used for grilling steaks and similar foods.

WARNING: The grill pan has a detachable handle. Make sure when using the grill pan handle that it is centralised and secure, as shown in the figure below. Use two hands to hold the grill pan handle. Do not leave the handle in position while grilling is in operation.

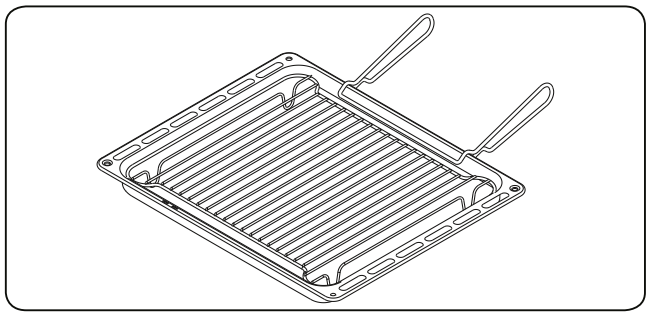

WARNING

The wire grid is used for grilling or for processing food in other containers.

If you require any technical guidance or find that your product is not operating as intended, a simple solution can often be found in the **Troubleshooting** section of these instructions,

Using your Electrical cooker

Getting the most from your appliance

Energy fiche

	Brand		BUSH
	Model		DHBEDC50B DHBEDC50W
	Type of Oven		ELECTRIC
	Mass	kg	45,0
Upper Cavity	Energy Efficiency Index - conventional		105,9
	Energy Efficiency Index - fan forced		-
	Energy Class		A
	Energy consumption (electricity) - conventional	kWh/cycle	0,72
	Energy consumption (electricity) - fan forced	kWh/cycle	-
	Heat Source		ELECTRIC
	Volume	l	31
Lower Cavity	Energy Efficiency Index - conventional		-
	Energy Efficiency Index - fan forced		94,0
	Energy Class		A
	Energy consumption (electricity) - conventional	kWh/cycle	-
	Energy consumption (electricity) - fan forced	kWh/cycle	0,73
	Heat Source		ELECTRIC
	Volume	l	54
	Number of cavities		2
	This oven complies with EN 60350-1		
	Energy Saving Tips Oven - Cook the meals together, if possible. - Keep the pre-heating time short. - Do not elongate cooking time. - Do not forget to turn-off the oven at the end of cooking. - Do not open oven door during cooking period.		

Using your Electrical cooker

Getting the most from your appliance

Brand		BUSH
Model		DHBEDC50B DHBEDC50W
Type of Hob		Electric
Number of Cooking Zones		4
Heating Technology-1		Radiant
Size-1	cm	Ø14,5
Energy Consumption-1	Wh/kg	192,0
Heating Technology-2		Radiant
Size-2	cm	Ø14,5
Energy Consumption-2	Wh/kg	192,0
Heating Technology-3		Radiant
Size-3	cm	Ø18,0
Energy Consumption-3	Wh/kg	192,0
Heating Technology-4		Radiant
Size-4	cm	Ø18,0
Energy Consumption-4	Wh/kg	192,0
Energy Consumption of Hob	Wh/kg	192,0
This hob complies with EN 60350-2		

Energy Saving Tips

Hob

- Use cookwares having flat base.

- Use cookwares with proper size .

- Use cookwares with lid.

- Minimize the amount of liquid or fat.

- When liquid starts boiling , reduce the setting.

If you require any technical guidance or find that your product is not operating as intended, a simple solution can often be found in the **Troubleshooting** section of these instructions,

Using your Electrical cooker

Getting the most from your appliance

Care and maintenance 6

Care and maintenance

Looking after your appliance

Cleaning

WARNING: Switch off the appliance and allow it to cool before cleaning is to be carried out.

General Instructions

- Check whether the cleaning materials are appropriate and recommended by the manufacturer before use on your appliance.
- Use cream cleaners or liquid cleaners which do not contain particles. Do not use caustic (corrosive) creams, abrasive cleaning powders, rough wire wool or hard tools as they may damage the cooker surfaces.

Do not use cleaners that contain particles, as they may scratch the glass, enamelled and/or painted parts of your appliance.

- Should any liquids overflow, clean them immediately to avoid parts becoming damaged.

Do not use steam cleaners for cleaning any part of the appliance.

Cleaning the inside of the oven

- The inside of enamelled ovens are best cleaned while the oven is warm.
- Wipe the oven with a soft cloth soaked in soapy water after each use. Then, wipe the oven over again with a wet cloth and dry it.
- You may need to use a liquid cleaning material occasionally to completely clean the oven.

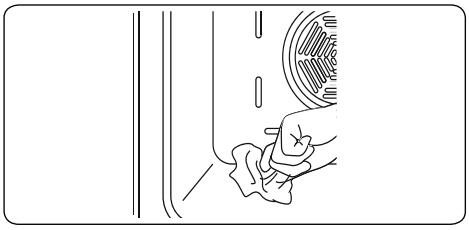

Cleaning the ceramic glass

Ceramic glass can hold heavy utensils but may be broken if it is hit with a sharp object.

WARNING : Ceramic Cooktops - if the surface is cracked, to avoid the possibility of an electric shock, switch off the appliance and call for service.

- Use a cream or liquid cleaner to clean the vitroceramic glass. Then, rinse and dry the glass thoroughly with a dry cloth.

Do not use cleaning materials meant for steel as they may damage the glass.

- Spilt sugary or sweet foods must be cleaned immediately after the glass has cooled.
- Dust on the surface must be cleaned with a wet cloth.
- Any changes in colour to the ceramic glass will not affect the structure or durability of the ceramic and is not due to a change in the material.

Colour changes to the ceramic glass may be for a number of reasons:

1. Spilt food has not been cleaned off the surface.

2. Using incorrect dishes on the hob will erode the surface.

3. Using the wrong cleaning materials.

Cleaning the glass parts

- Clean the glass parts of your appliance on a regular basis.
- Use a glass cleaner to clean the inside and outside of the glass parts. Then, rinse and dry them thoroughly with a dry cloth.

Cleaning the enamelled parts

- Clean the enamelled parts of your appliance on a regular basis.
- Wipe the enamelled parts with a soft cloth soaked in soapy water. Then, wipe them over again with a wet cloth and dry them.

Do not clean the enamelled parts while they are still hot from cooking.

Do not leave vinegar, coffee, milk, salt, water, lemon or tomato juice on the enamel for a long time.

Cleaning the stainless steel parts (if available)

- Clean the stainless steel parts of your appliance on

Care and maintenance

Looking after your appliance

a regular basis.

- Wipe the stainless steel parts with a soft cloth soaked in only water. Then, dry them thoroughly with a dry cloth.
- Do not clean the stainless steel parts while they are still hot from cooking.
- Do not leave vinegar, coffee, milk, salt, water, lemon or tomato juice on the stainless steel for a long time.

Removal of the oven door

Before cleaning the oven door glass, you must remove the oven door, as shown below.

1. Open the oven door.

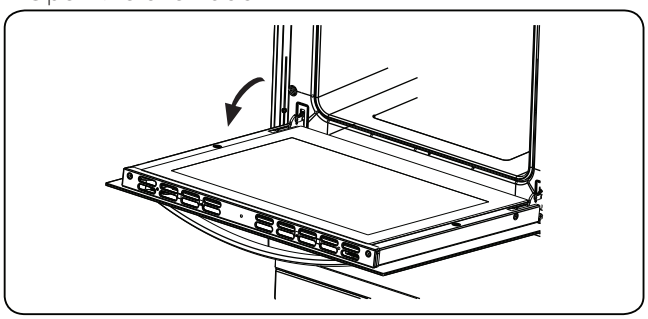

2. Open the saddle bracket (**a**) (with the aid of a screwdriver) up to the end position.

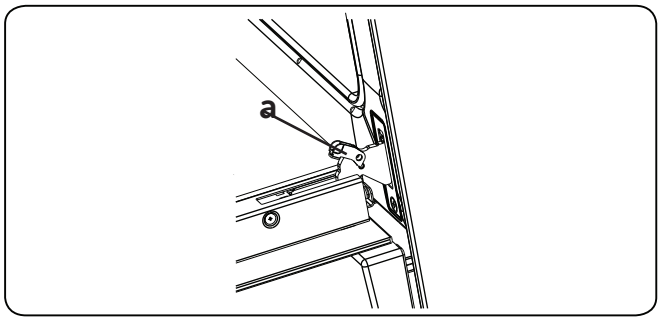

3. Close the door until it almost reaches the fully closed position and remove the door by pulling it towards you.

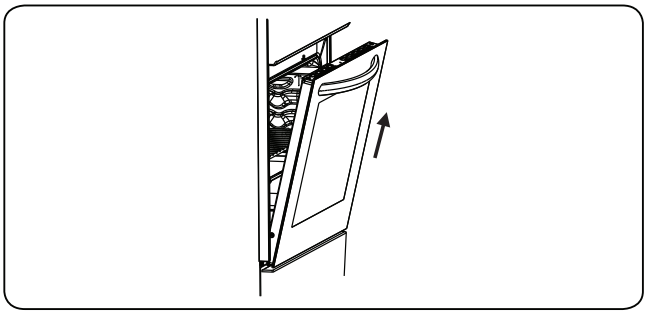

Maintenance

WARNING: The maintenance of this appliance should be carried out by an authorised service person or qualified technician only.

Changing the Oven Lamp

WARNING: Switch off the appliance and allow it to cool before changing the oven lamp.

- Remove the glass lens, then remove the bulb.
- Insert the new bulb (resistant to 300 °C) to replace the bulb that you removed (230 V, 15-25 Watt, Type E14/G9).
- Replace the glass lens, and your oven is ready for use.
- The product contains a light source of energy efficiency class G.
- Light source can not be replaced by end user. After sales service is needed.
- The included light source is not intended for use in other applications.

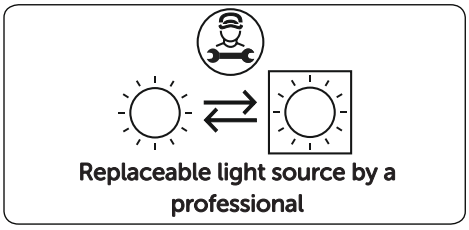

The lamp is designed specifically for use in household cooking appliances. It is not suitable for household room illumination.

7 Product support

Product support

Help is always at hand

Troubleshooting

If you still have a problem with your appliance after checking these basic troubleshooting steps, please contact an authorised service person or qualified technician.

Problem	Possible Cause	Solution
The hob or cooking zones cannot be switched on.	There is no power supply.	Check the household fuse for the appliance. Check whether there is a power cut by trying other electronic appliances.
Oven does not switch on.	Power is switched off.	Check whether there is power supplied. Also check that other kitchen appliances are working.
No heat or oven does not warm up.	Oven temperature control is incorrectly set. Oven door has been left open.	Check the oven temperature control knob is set correctly.
Cooking is uneven within the oven.	Oven shelves are incorrectly positioned.	Check that the recommended temperatures and shelf positions are being used. Do not frequently open the door unless you are cooking things that need to be turned. If you open the door often, the interior temperature will be lower and this may affect the results of your cooking.
Oven light (if available) does not operate.	Lamp has failed. Electrical supply is disconnected or switched off.	Replace lamp according to the instructions. Make sure the electrical supply is switched on at the wall socket outlet.
The timer buttons cannot be pressed properly.	There is foreign matter caught between the timer buttons. Touch model: there is moisture on the control panel. The key lock function is set.	Remove the foreign matter and try again. Remove the moisture and try again. Check whether the key lock function is set.
The oven fan (if available) is noisy.	Oven shelves are vibrating.	Check that the oven is level. Check that the shelves and any bake ware are not vibrating or in contact with the oven back panel.

Transport

If you need to transport the product, use the original product packaging and carry it using its original case. Follow the transport signs on the packaging. Tape all independent parts to the product to prevent damaging the product during transport.

If you do not have the original packaging, prepare a carriage box so that the appliance, especially the external surfaces of the product, is protected against external threats.

If you require any technical guidance or find that your product is not operating as intended, a simple solution can often be found in the **Troubleshooting** section of these instructions,

Product support

Help is always at hand

Help and assistance

If you require any technical guidance or find that your Electical cooker oven is not operating as intended, a simple solution can often be found in the **Troubleshooting** section of these instructions or online at **www.argos-support.co.uk**

If you still require further assistance, call one of our experts on **0345 257 7271**. To help give us give you a fast and efficient service please have the following information ready:

Model Ref.		You can find these on the rating plate - a small information panel (usually a sticker or metal plate) on the rear of your appliance
Serial number		
Date of purchase		This will be shown on your receipt

Local call rates applies*

Lines open 9am-6pm Monday to Saturday and 10am-6pm on Sunday.

*Calls to Bush enquiry lines may attract a charge and set up fee from residential lines depending on your call plan/tariff. Mobile and other providers costs may vary, see www.bt.com/pricing for details.

For Security and training purposes, telephone calls to and from customer service centres maybe recorded and monitored. Calls from Republic of Ireland will attract international call charges.

or online at **www.argos-support.co.uk** If you still require further assistance, call one of our experts on **0345 257 7271.**

Product support

Help is always at hand

Information about transportation

Keep the original packaging materials in a safe place. Transport the product by using its original packaging. Follow the instructions that are printed on the packaging.

If you do not have the original packaging materials, take the necessary precautions in order to prevent the exterior panels, and the glass surfaces of the product from being damaged.

The product must be transported upright position.

Disposal

- The symbol on the product or on its packaging indicates that this product may not be treated as household waste. Instead it shall be handed over to the applicable collection point for the recycling of electrical and electronic equipment.
- By ensuring this product is disposed of correctly, you will help prevent potential negative consequences for the environment and human health, which could otherwise be caused by inappropriate waste handling of this product.
- For more detailed information about recycling of this product, please contact your local city office, your household waste disposal service or the shop where you purchased the product.

If you require any technical guidance or find that your product is not operating as intended, a simple solution can often be found in the **Troubleshooting** section of these instructions,

Product support

Help is always at hand

BUSH

Call us now and activate your 12 month guarantee

Thank you for choosing Bush. Your new product is guaranteed against faults and breakdowns for 12 months. Don't forget to register it with us today so we can provide you with our best possible after-sales service and useful updates.

www.bushregistration.co.uk

FREEPHONE*

0800 597 8548

Lines are open 8am - 8pm, 365 days a year. *Calls may be recorded and monitored.

Your Bush Guarantee

This product is guaranteed for twelve months from the date of original purchase. Any defect that arises due to faulty materials or workmanship will be repaired free of charge (or if applicable the product will be replaced or the purchase price refunded) where possible during this period by the dealer from who your purchased the unit.

The guarantee is subject to the following provisions:

- The guarantee does not cover accidental damage, misuse, cabinet parts, knobs or consumable items.
- The product must be correctly installed and operated in accordance with the instructions contained in the manual.
- It must be used solely for domestic purposes. The guarantee will be rendered invalid if the product is re-sold or has been damaged by inexpert repair.
- Specifications are subject to change without notice.
- Bush disclaim any liability for loss or damage arising from the breakdown of the product.
- This guarantee is in addition to and does not diminish your statutory or legal rights.

Important Data Protection Information

To find out how we and Domestic & General Insurance Plc use your data please refer to the guarantee registration material or visit www.bushregistrations.co.uk.

Guarantor: Argos Limited - London, EC1M 6HA, UK.

or online at **www.argos-support.co.uk** If you still require further assistance, call one of our experts on **0345 257 7271.**

BUSH

Produced in Türkiye for
Argos Limited, London, EC1M 6HA, UK.
Argos (N.I.) Ltd., Forestside Shopping Centre,
Upper Galwally, Belfast, BT8 6FX, UK.

BUSH is a registered trademark of Argos Ltd.

Contact:

www.argos-support.co.uk

www.bush-support.com

Helpline: 0345 257 7271

52566502