图号	版本
N6020030159	C

后附54页图纸

技术要求

1.材料为70g胶版纸，正反面印刷；
2.印刷为黑白色单色印刷；
3.所有印刷内容正确、清晰，不得有漏印、误印，无印刷缺陷；
4.幅面：A4（297±3）X（210±3），（单位：mm）；
5.未注公差按照GB/T 1804-m；
6.颜色及整体效果必须经过研发部确认后方能生产，产品检验以封样件为准；
7.有害化学物质含量参照《Q/HKX J16001》执行；
8.说明书警示语部分的文字大写字母高度必须大于3mm。

借(通)用件登记

旧底图总号	序号	零件号	材料	颜色	表面处理	首次使用产品型号	备注
	1	20272666				WFMA1114-MVK002(01)	

底图总号	标记	处数	更改单编号	更改说明
			OCA-XY260380	更新P28 P29 封尾物料号

出图审查 / 日期								
	设计	李孟哲	2026.3.27	通用化	侯昌漾	2026.3.27	比例	1:1
	审核	高 洁	2026.3.27	品质	金文兵	2026.3.27	共 55 张	第 1 张
	工艺	庄胥春	2026.3.27	制图	李孟哲	2026.3.27	投影符号	
	标准化	程木聪	2026.3.27	批准	崔维明	2026.3.27		

Hisense

细类名称 订单说明书

功能位置

图号 N6020030159

版本 C

BUSH

Instruction manual

BWM111400W
BWM111400B

You'll soon be enjoying your new washing machine.

It all begins here, with your instructions. Don't worry, there's nothing too technical coming up. Just simple, step-by-step guidance to get you up and running quickly. Sound good? Then let's get started.

Help and Guidance

We're here to help you get the most from your washing machine. Should you require any guidance, a simple solution can often be found online at:

www.bush-support.com

If you still require further assistance, call one of our experts on 0345 257 7271.

ISSUE-2 17/04/2026

If you require any technical guidance or find that your product is not operating as intended, a simple solution can often be found in the **Troubleshooting** section of these instructions,

Contents

1 Safety information

Safety information 6

2 Getting to know your washing machine

Ready? Let's begin 10

Accessories 11

3 Installing your washing machine

Installation 14

Unpacking 14

Connections (electrical, water, gas) 16

4 Functions

Functions 20

5 Using your washing machine

First use of washing machine 32

Guidelines of washing detergent 34

6 Care and Maintenance

Cleaning 38

Maintenance actions 38

Technical specifications 41

7 Product support

Troubleshooting 48

Help and assistance 49

Declaration of conformance to product standards 50

Disposal 50

Safety information 1

Safety information

Important - Please read these instructions fully before installing or operating

- Do not connect the machine if it has been damaged in transit.
- If the supply cord is damaged, it must be replaced by the manufacturer, its service agent or similarly qualified persons in order to avoid a hazard.
- The new hose-sets supplied with the appliance are to be used and the old hose-sets should not be reused.
- This washing machine is for indoor use only and must be protected from rain, moisture and extreme temperature variations. Never expose the machine to intense heat or humidity.
- This washing machine is designed for household use only. Do not use the machine for industrial and commercial use, or any other purpose.
- The openings must not be obstructed by a carpet.
- This appliance can be used by children aged from 8 years and above and persons with reduced physical, sensory or mental capabilities or lack of experience and knowledge if they have been given supervision or instruction concerning use of the appliance in a safe way and understand the hazards involved. Children shall not play with the appliance. Cleaning and user maintenance shall not be made by children without supervision.
- Pull out its plug from the power socket before cleaning or maintenance.
- Make sure that all pockets are emptied.
- This machine must be positioned on a firm level base.
- Do not splash water on the machine. It may cause electrical parts to fail and result in an electric shock.
- Sharp and rigid items such as a coin, brooch, nail, screw or stone etc. may cause serious damages to this machine.
- Pull out its plug and cut off water supply after the operation.
- Please check whether the water inside the drum has been drained before opening its door. Please do not open the door if there is any water visible.
- Check machine before every operation to ensure pets and children are not in the machine.
- Glass door may be very hot during the operation. Keep children and pets far away from the machine during the operation.
- Take care that power voltage and frequency shall be identical to those required by washing machine.
- Do not use any socket with rated current less than that required by washing machine. Never pull out power plug with wet hand.

If you require any technical guidance or find that your product is not operating as intended, a simple solution can often be found in the **Troubleshooting** section of these instructions,

Safety information

Important - Please read these instructions fully before installing or operating

- To ensure your safety, the power cord plug must be inserted into an earthed three-pole socket. Check carefully and make sure that your socket is properly and reliably earthed.
- When installing the machine, the mains plug of the power cord must be freely accessible.
- To disconnect the power cord, pull it out by plug. Do not drag the cord itself. Doing so may result in damage to the cord, leading to fire or electric shock. For safety reason, unplug the power cord from the wall outlet if the machine will not be used for an extended period of time such as holidays.
- To avoid the risk of overloading your plug socket, do not use of adapters, multiple connectors or extension cables.
- Children of less than 3 years should be kept away unless continously supervised.
- Do not let children play with the machine.
- Packing materials may be dangerous to children. Please keep all packing materials (plastic bags, foams etc) far away from children.
- Washing machine shall not be installed in bath room or very wet rooms as well as in rooms with explosive or caustic gases.
- Make sure that the water and electrical devices are connected by a qualified technician in accordance with the manufacturer's instructions and local safety regulations.
- Before operating this machine, all packages and transport bolts must be removed. Otherwise, the washing machine may be seriously damaged while washing the clothes.
- After unpacking the washing machine, please undertake one wash cycle with no clothes first to clean the drum before using it for your clothes.
- The washing machine with single inlet valve only can be connected to the cold water supply.
- CAUTION: Do not connect to the hot water supply.
- Your washing machine is only for home use and is only designed for textiles suitable for machine washing.
- Flammable and explosive or toxic solvents are forbidden. Gasoline and alcohol etc. shall not be used as detergents and shall only select the detergents suitable for machine washing.
  It is forbidden to wash carpets.
- Be careful of burning when washing machine drains hot washing water. Never refill the water by hand during washing.
- After the program is completed, please wait for two minutes to open the door.

Safety information

Important - Please read these instructions fully before installing or operating

- Please remember to disconnect water and power supply immediately after the clothes are washed.
- Do not climb up and sit on top cover of the machine.
- Do not lean against machine door.
- Please do not close the door with excessive forces. If it is found to be difficult to close the door, please check that the loading is not excessive and the load is distrubted evenly.
- The household washing machine isn't intended to be built-in.
- Cautions: During handing machine
  1. Unplug the machine.
  2. Transport bolts shall be reinstalled to the machine by a qualified person.
  3. The accumulated water shall be drained out of the machine.
  4. Handle the machine carefully.
- Never hold each protruded part on the machine while lifting. Machine door can not be used as the handle during the conveyance.
- Cord entanglement hazard. The cable of the appliance can give rise to risks of entanglement, strangulation or tripping if not correctly placed. You must make sure that the electric cable is positioned safely.
- CAUTION: Do not overload the machine as it will get damaged while washing your clothes.
- Alway check for the maximum dry cloth to be used in the machine before operation - see Programme Selection Guide on page 29 for details. The
- maximum inlet water pressure: 1,0MPa
- The minimum inlet water pressure: 0,1MPa
- Do not attempt to repair the machine yourself.
  Contact the Customer Helpline: 0345 257 7271

If you require any technical guidance or find that your product is not operating as intended, a simple solution can often be found in the **Troubleshooting** section of these instructions,

Getting to know your washing machine

2

Getting to know your washing machine

You'll be up and running in no time

Ready? Let's begin...

Please read these instructions carefully. They contain important information which will help you get the best from your washing machine and ensure safe and correct installation and operation.
If you require any further assistance, our technical experts are happy to help. For full details, refer to the product support section at the end of these instructions.

Getting to know your washing machine

You'll be up and running in no time

Component

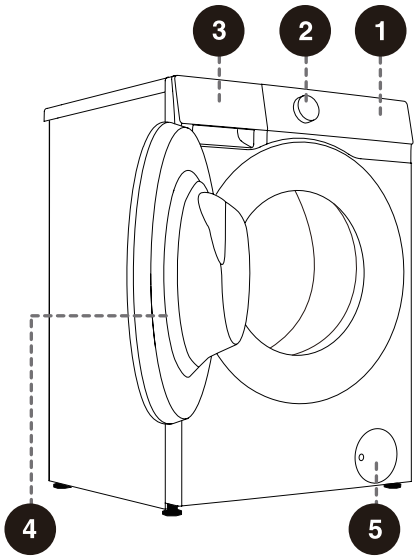

FRONT

1 Control Panel
2 Cycle selector knob
3 Detergent dispenser drawer
4 Door
5 Drain pump filter cover

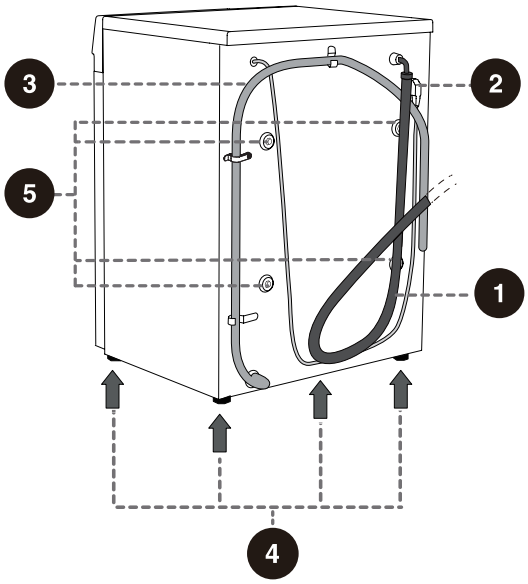

BACK

1 Cold water inlet hose
2 Power cord
3 Drain hose
4 Adjustable feet
5 Transport bolt x 4

Accessories

This machine includes below accessories,please install these parts by yourself before operating.

- plastic hole plug x 4
- Cold water inlet hose
- Wrench
- Noise reduction board

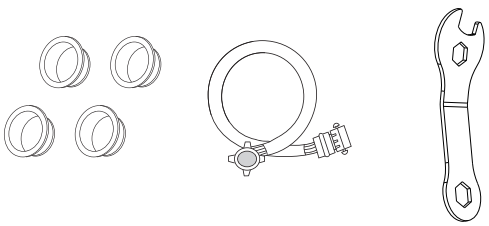

Tools

You may use these tools (not supplied) to help install above parts

- glove

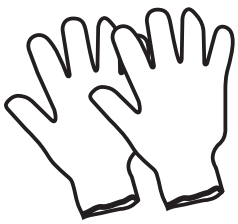

The illustrations in this manual are for illustrative purposes only. Due to product improvements and series expansion, the appearance, color, and functional components of the product you receive may differ from those shown in this manual. Please refer to the actual product.

Getting to know your washing machine

You'll be up and running in no time

Model	Capacity	Spin Speed	Energy class
BWM111400W	11kg	1400rpm	A
BWM111400B	11kg	1400rpm	A

Specifications

Model	BWM111400W BWM111400B
Maximum load	11kg
Net weight	72kg
Rated voltage	220-240V~
Rated frequency	50Hz
Rated power input	1650W

Dimensions

Index	Dimensions (mm)
	11kg
A	595
B	Min. 845 / Max. 855 *
C	610
D	640
E	670
F	1150

*Min. height: Height with the adjustable feet not used.
Max. height: Height with the adjustable feet extended to the maximum.

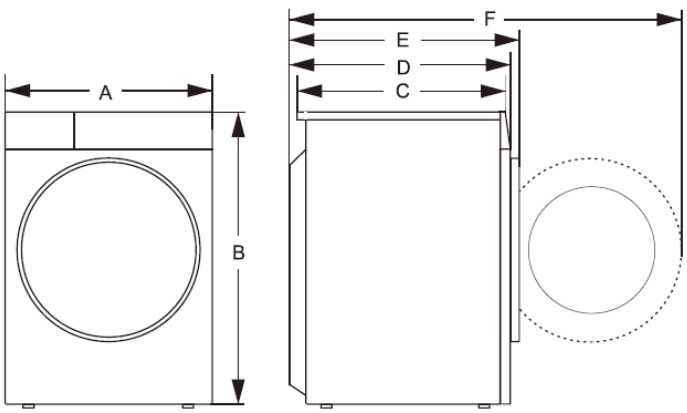

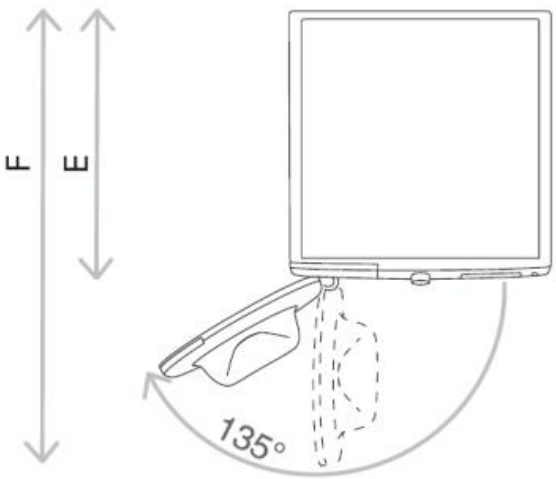

E Appliance depth
F Depth with door open

If you require any technical guidance or find that your product is not operating as intended, a simple solution can often be found in the **Troubleshooting** section of these instructions,

Installing your washing machine

3

Installing your washing machine

Bringing it all together

Installation

- In addition to the instructions mentioned here, special regulations of the relevant water companies may apply. If in doubt, have the washing machine connected by a qualified technician.
- The washing machine is heavy - caution when lifting it.
- Do not lift by projecting components (e.g. washing machine door).
- Warning: Frozen hoses may tear/burst. Do not install washing machine in outdoor areas or where there is a risk of frost. Please operate washing machine above 0℃.
- Lay hoses and cables in such a way that there is no risk of tripping over them.

⚠ An additional space (minimum 50mm) is required at the rear of the washing machine. This is to allow enough space for the water hoses.

Installation location

Place the appliance on a solid and level floor to keep it stable. The floor should be clean and dry; otherwise, the appliance may slide. Also, clean the bottom surface of adjustable feet.

ADJUSTABLE FEET

Use a spirit level and the supplied wrench.

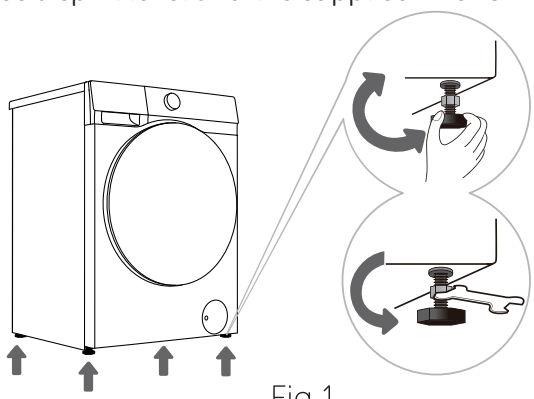

Fig 1

1: Rotate the adjustable feet to level the appliance lengthwise and crosswise. The feet allow levelling by 2 cm.

2: After adjusting the height of the feet, use the supplied wrench to securely tighten the locknuts by turning them counterclockwise (see Fig 1).

Incorrect levelling of the appliance may cause vibration, appliance sliding across the room, and loud operation. Incorrect levelling of the appliance is not subject to warranty.
Sometimes, unusual or louder noise may appear during appliance operation. These are mostly the result of improper installation.

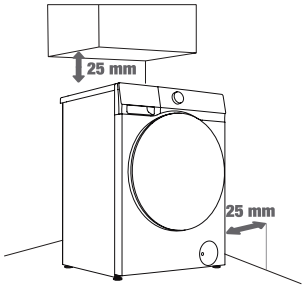

Fig 2

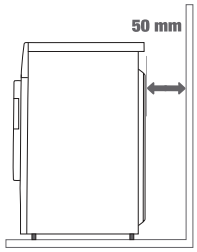

Fig 3

The appliance may not be in contact with a wall or adjacent furniture. For optimum appliance operation, we recommend observing the clearances from the walls as indicated.(Fig2,3)
In case of failure to observe the minimum required clearances, safe and correct appliance operation cannot be ensured. Moreover, overheating can also occur .(Fig2,3)

Unpacking

Unpacking your washing machine

Caution:Two people are required to unpack the washing machine, it is recommended that gloves are worn.

Carefully remove all packing materials including the foam base and dispose of correctly.

Note:When opened, water droplets may be visible in the drum etc. this is normal as each appliance is tested before delivery.

If you require any technical guidance or find that your product is not operating as intended, a simple solution can often be found in the **Troubleshooting** section of these instructions,

Installing your washing machine

Bringing it all together

Installing the Noise Reduction Board

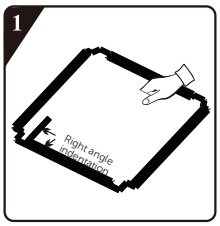

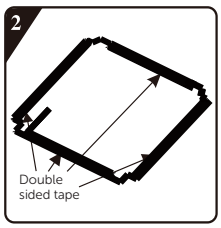

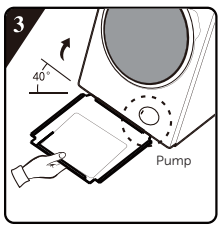

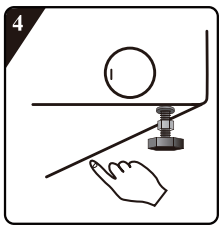

1: Find the right angle indentation on the board.

2: Remove the protective paper from the double sided tape on all four sides of the noise reduction board.

3: Tilt the appliance to an angle of 40°. Position the side with the right angle notch toward the front of the appliance, as shown in the illustration. Fully insert the side with the oblique angle notch between the two rear foot screws. Then position the noise reduction board so that it fits closely against the bottom of the appliance.

4: Press firmly along all four sides to secure the noise reduction board to the appliance using the double sided tape.

Removing the transport bolts

Important:The transport bolts are designed to support the internal components during transit and these MUST be removed before use.

1: Loosen the screws by rotating counterclockwise with a suiltable wrench. (Fig 4)

2: Remove the bolts by pulling them. (Fig 5,6)

3: When the transport bolts have been removed, insert the plastic hole pulgs found in the accessories bag into the holes. (Fig 7,8)

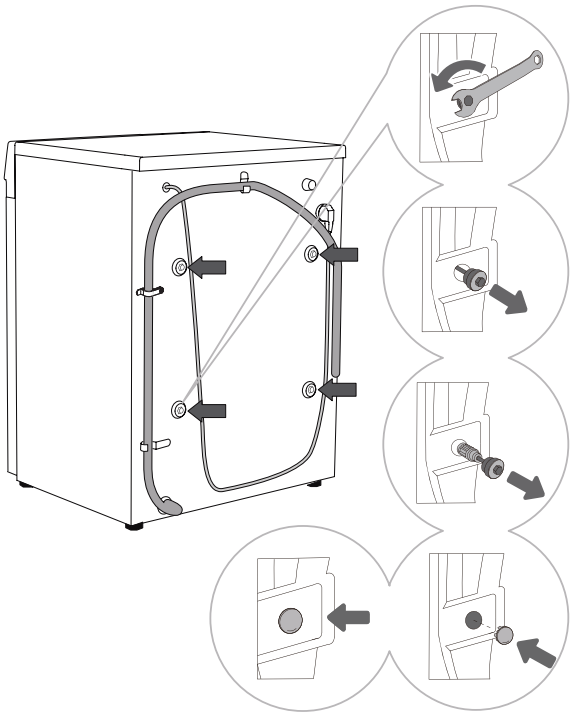

Fig 8

Installing your washing machine

Bringing it all together

Installation Location

1:For your machine to work efficiently with minimum vibration it should be settled on flat, **non-slipping**, firm ground.

2:You can adjust the balance of your machine by changing the positioning of its feet.

3:First, loosen the plastic adjustment nut. **(Fig 9)**

4:Adjust by rotating the feet upwards or downwards. **(Fig 10)**

5:After the desired position has been reached, tighten the plastic adjustment nut again by rotating it upwards.

Note: Never put cartons,wooden blocks or similar materials under the machine to balance irregularities in the level of the ground.

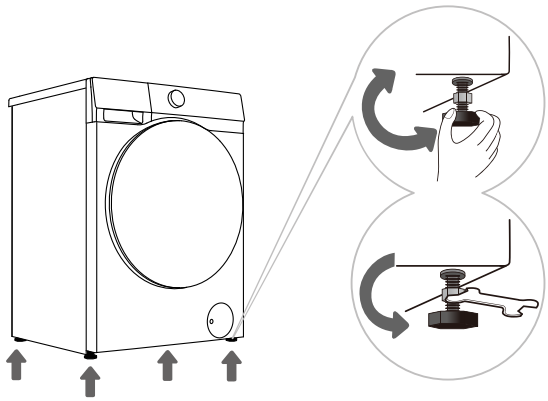

Fig 9

Fig 10

Connecting To Water Supply

Tighten the water inlet hose by hand to ensure proper sealing (maximum torque: 2 Nm). Check the sealing for leaks.
Do not use pliers or similar tools as they may damage the nut threads.

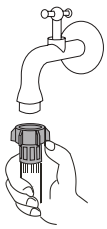

Notes:

For normal appliance operation, the pressure in the water mains should be between 0.1-1MPa (1-10 bar; 1-10 kp/cm^2; 10-100 N/cm^2). Minimum dynamic water pressure can be determined by measuring the water flow. In 15 seconds, 3 litres of water should flow from a fully open tap.
Only use the water inlet hose supplied with the appliance. Do not use any used or other hoses. Make sure the hose is not damaged. If the hose is degraded, brittle, or cracked, it has to be replaced. This appliance is designed for cold water only.
Important: Do not connect it to hot water.

Checking The Connection Between The Water Inlet Hose And The Tap

1.Gently pull the water inlet hose to check if the connection is secure.
2.Open the tap to check for leaks.
3.The water inlet hose should not be twisted or bent.
4.Check the water inlet hose before each use to prevent incorrect connection.

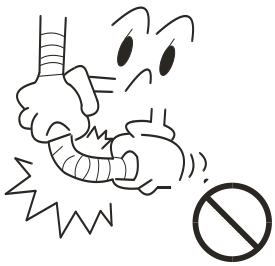

Connecting The Water Inlet Hose To The Appliance

Connect the water inlet hose nut to the water supply hose connector of the appliance. Tighten the nut and shake it gently to check that it is firmly secured, as shown fig 11.

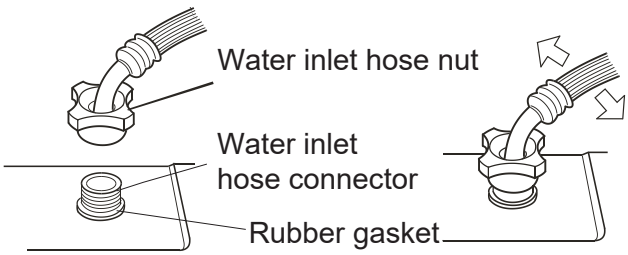

Fig 11

Notes:

1. Tighten the nut evenly. Avoid rotating the water inlet hose, as this may cause damage.
2. Do not remove the rubber gasket. Before each use, check that the gasket is not detached or damaged. If damaged, please contact after-sales service immediately.

If you require any technical guidance or find that your product is not operating as intended, a simple solution can often be found in the **Troubleshooting** section of these instructions,

Installing your washing machine

Bringing it all together

Drain hose connections

Feed the drain hose into a washbasin or a bathtub, or connect it directly to a drain
(drain hose minimum diameter 4 cm). The vertical distance from the floor to the end of the drain hose may be 70 to 100 cm. It can be attached in three ways (A, B, C).

A. The drain hose end may be placed over a sink or a bathtub. Use a string fed through the opening in the elbow support to attach the hose and prevent it from slipping to the floor.
B. The drain hose may also be attached directly to the sink drain. A sink that is too small is not acceptable. Be careful as the drained water may be hot.
C. The drain hose can also be attached to a wall drain with a trap. Such trap should be properly installed to allow cleaning.

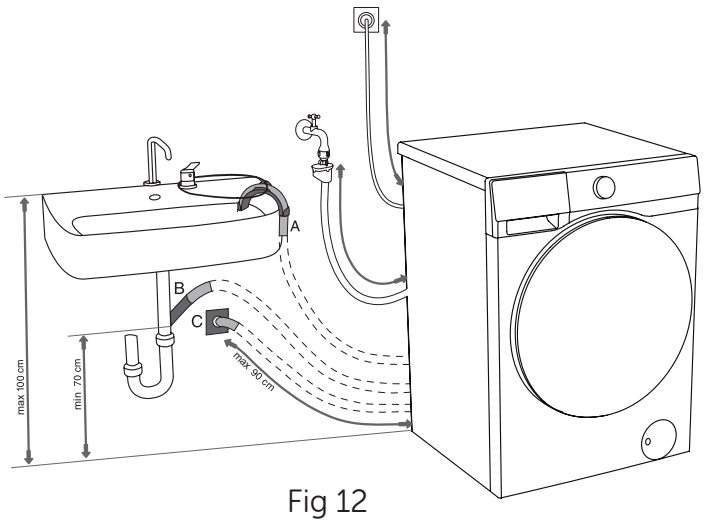

Fig 12

⚠ The drain hose has to be attached to the clips on the back of the appliance, as shown in the fig 13.These clips must not be removed as this may prevent normal washing.

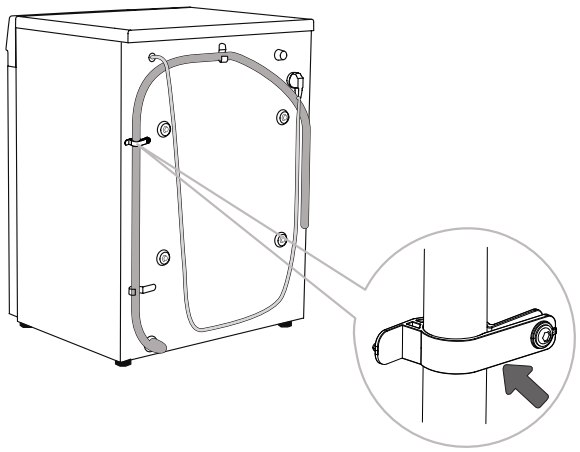

Fig 13

Installing your washing machine

Bringing it all together

Electrical

Any electrical work that is required to install this appliance MUST be carried out by a qualified electrician.

Warning:THIS APPLIANCE MUST BE EARTHED

Before making any electrical connections, ensure that:

- Electrical safety is only guaranteed when the earth system of your house is in accordance with the related local regulations.
- Do not bend, stretch or pull the supply cable to avoid electric shock.
- Ensure the power socket is suiable for the maximum power of the machine (fuses in the power circuit must be 13 amp).
- The supply voltage should be the same as that indicated in the technical specifications and the applicance rating plate.
- The appliance should be earthed and in complicance with the applicable law.
- When installed, the power socket must be within easy reach.
- If the socket outlets in your home are not suitable for the plug supplied with this unit check with a qualified electrician for replacement.
- To avoid the risk of overloading your plug socket, adapters, multiple connectors or extension cables should not be used.
- The applicance must be connected to a 220-240 volt 50Hz AC supply by means of a three pin socket, suitably earthed and protected by a 13 amp fuse.
- Should the fuse need to be replaced , a 13 amp fuse approved to BS 1362/A must be used.
- The plug contains a removable fuse cover that must be refitted when the fuse is replaced. if the fuse cover is lost or damaged, the plug must not be used until a replacement cover has been fitted or the plug is replaced.
- A damaged plug should be cut off as close to the plug body as possible , the fuse should be removed and the plug disposed of safely.
- If power supply cord is daraged, it must replacedby the manufacturer or its service agent or asimilar qualified person in order to avoid a hazard.

Transportation after installation

If you need to transport an installed appliance, first unplug the power plug, turn off the tap, remove the water inlet and drain hoses, and make sure the detergent box and door are closed properly.

- Be sure to reinstall the transport screws to prevent vibrations during transport from damaging the appliance (see "Installation and connection/removal of transport screws"). If you accidentally lose the transport screws, you can order them from the manufacturer.
- Pack all packaging materials (plastic bags, other plastic parts, etc.).
- The appliance is heavy. Please use at least two people to move it. When transporting, do not hold protruding parts such as the door, top cover, etc., to prevent them from falling off or being damaged.
- After transport, let the appliance sit for at least 2 hours before connecting it to the power supply. The appliance should be installed and connected by trained technicians.
- Please read the instructions carefully before reconnecting the appliance. Damage caused by improper connection or use is not coveredby the warranty.

Transport and Handling Method

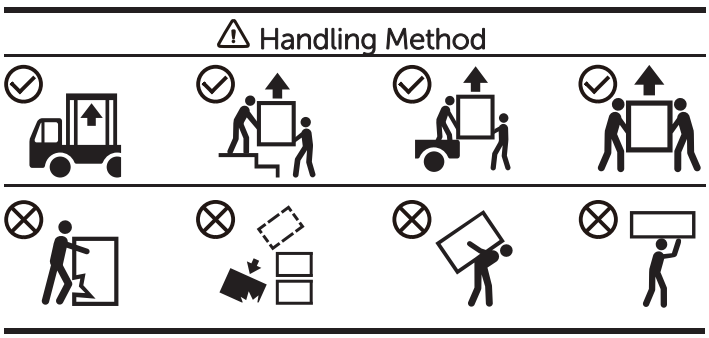

If you require any technical guidance or find that your product is not operating as intended, a simple solution can often be found in the **Troubleshooting** section of these instructions,

Functions 4

Functions

Simple everyday use

Introduction of control panel

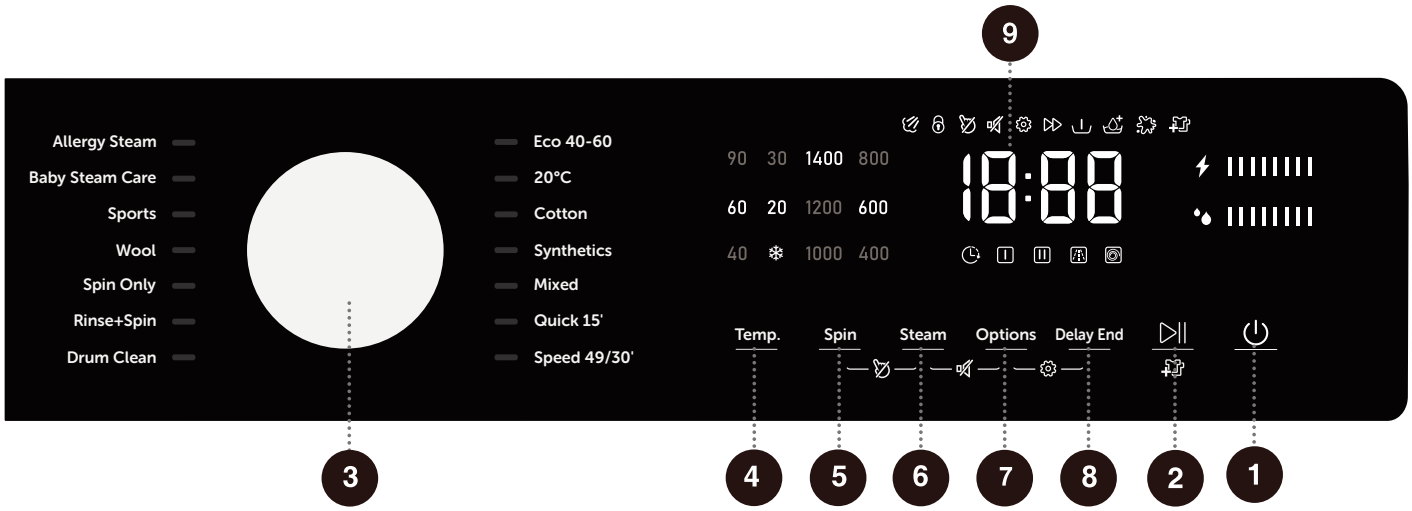

1 Power
Used to turn the appliance power on/off.

2 Start/Pause
Used to start/pause a programme.

3 Cycle Selector
Turn the main knob to select the programme.

4 Temp
Set washing temperature.

5 Spin
Set dehydration spin speed.

6 Steam
Used to turn the steam function of the programme on/off.

7 Options
Press this button to select additional functions for the programme .

8 Delay End
This function allows you to schedule laundry at your convenience.

9 Display
Used to display the remaining time of the programme , delay time, fault code, and other related information.

5+6 Child Lock
Press and hold these two buttons at the same time to turn on/off the child lock function.

6+7 Mute
Press and hold these two buttons simultaneously to enable/disable the mute function.

7+8 Cleaning reminder
Press and hold these two buttons simultaneously to turn the cleaning reminder function on/off.

If you require any technical guidance or find that your product is not operating as intended, a simple solution can often be found in the **Troubleshooting** section of these instructions,

Functions

Simple everyday use

Programme table

Turn on the power of the appliance and turn the cycle selector knob to select the appropriate programme (depending on the type of clothing and the degree of dirtiness). During operation, the selector knob will not turn automatically.

Programme	Maximum load (kg)	Maximum speed (rpm)	Programme description
	11		
Eco 40~60 **-**	11	1400	This programme is suitable for washing cotton clothes that are lightly soiled.
20°C **(20°C)**	11	1400	This programme is suitable for cotton cloth with a light degree of soiling, achieving energy-saving and environmentally friendly washing performance through cold water washing.
Cotton **(❄, 20°C, 30°C, 40°C, 60°C, 90°C)**	11	1400	This programme is suitable for washing cotton or linen fabrics that are moderately and heavily soiled.
Synthetics **(❄, 20°C, 30°C, 40°C, 60°C)**	5.5	1400	This programme is suitable for medium soiled synthetic fabrics and cotton fabrics.
Mixed **(❄, 20°C, 30°C, 40°C, 60°C)**	5.5	1400	This programme is suitable for lightly to medium soiled cotton or synthetic fabrics.
Quick 15' **(❄, 20°C, 30°C, 40°C)**	2	800	This programme is suitable for washing a small amount of laundry or lightly soiled laundry. If you change the default setting, the washing time will be longer.
Speed 49/30' **(❄, 20°C, 30°C, 40°C)**	4.5	1400	This programme is an intensive short-cycle washing programme designed for small loads of heavily soiled garments.
Drum Clean **(90°C)**	/	800	This programme is used to clean the drum and remove detergent residues, as well as bacteria that accumulate and grow when washing at low temperatures. Do not add detergent/softener for this programme.
Rinse+Spin **-**	11	1400	This programmeis for separate rinsing and spinning of laundry. Do not add detergent for this programme.
Spin Only **-**	11	1400	This programme is used for separate spinning of laundry. Do not add detergent/softener for this programme.
Wool **(❄, 20°C, 30°C, 40°C)**	3	600	This programme is suitable for washing machine washable woolen clothes (refer to the laundry label requirements).

Functions

Simple everyday use

Programme	Maximum load (kg)	Maximum speed (rpm)	Programme description
	11		
Sports (--,20℃,30℃,40℃)	4.5	1000	It is suitable for washing sportswear and casual clothes made of microfiber fabrics.
Baby Steam Care (40°C, 60°C, 90°C)	2	1400	This programme is suitable for washing baby clothes, underwear, etc., and sterilizes them at high temperatures. It is not recommended to add softener for this programme.
Allergy Steam (60℃)	2	1400	This programme is suitable for washing clothes that are resistant to high temperatures and are not easy to fade. It removes allergens such as pollen, mites, parasites, etc. through high temperatures.

Notes:

(1) Water temperature: Select the appropriate water temperature according to the selected washing programme. When washing, follow the clothing manufacturer's washing label or instructions to avoid damaging the clothing.
(2) The actual water temperature may differ from the stated programme temperature.
(3) Test results depend on water pressure, water hardness, inlet water temperature, room temperature, type and amount of laundry, degree of soiling, detergent used, power supply fluctuations and other options selected.
(4) If you add too much laundry during the wash cycle, the laundry may be washed less efficiently because the machine initially detects a lower weight and adds less water. Insufficient water can also cause damage to the laundry and the wash time will be longer.
(5) Drum Clean (if available): The drum must be emptied before using the Drum Clean programme. It is recommended to run it at least once a month.
(6) For descaling, use a descaling agent with corrosion protection (only use non-corrosive descaling agents and follow the instructions for use of the descaling agent). Run the "Drum Clean" (or other high temperature) programme several times to remove any descaling agent residues and complete descaling. It is recommended to descale at least once every six months.

-The maximum or nominal load applies to laundry prepared in accordance with the relevant provisions of standard IEC60456.

-For better washing performance, we recommend that you fill no more than 2/3 of the drum volume when using the Cotton programme.

If you require any technical guidance or find that your product is not operating as intended, a simple solution can often be found in the **Troubleshooting** section of these instructions,

Functions

Simple everyday use

Additional settings and functions

Each programme has default settings, and some functions can be adjusted by the user. Adjustments can be made by pressing the corresponding function buttons prior to pressing the Start/Pause button. Some functions are not available for certain programmes. In these cases, the indicator will not light up, and an acoustic signal will sound when the button is pressed (see "Function Selection Table"). Most functions can only be set in standby mode, before the programme starts. Once the programme has begun, most settings cannot be changed.

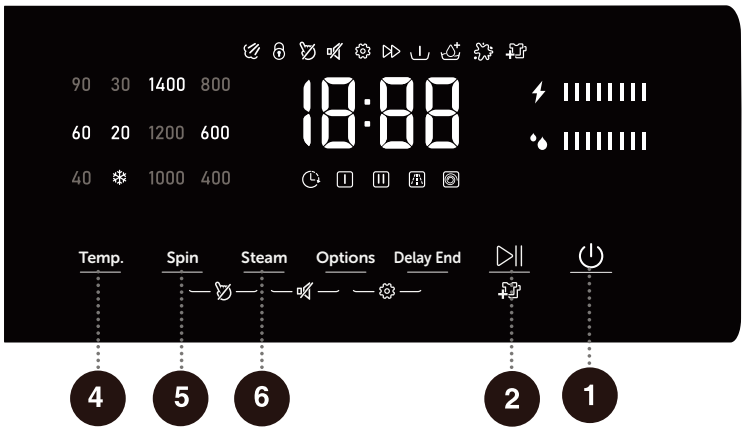

1. **Power** ⏻
   Used to turn the appliance's power on or off.
   To stop the programme during operation, press and hold the Power button to switch off the appliance.
   After a programme finishes, if no operation is performed for a certain period while in standby mode, the appliance will switch off automatically.
2. **Start/Pause** ▷II
   Used to start/pause a programme.
   The appliance cannot be started if the door is not closed or the door lock is not locked.
4. **Temp.**
   This function changes the temperature of the selected programme.
   Each programme has a preset temperature. Before starting the programme, press this button to cycle through the available temperature settings ("--" indicates a cold wash).
   The available heating temperatures vary depending on the selected programme.
5. **Spin**
   This function allows the spin speed to be adjusted before the programme starts. Press this button repeatedly to cycle through the available spin speed settings.
   When the spin speed indicator is off, the appliance will drain the water only, without spinning.
   Spin speed availability varies depending on the selected programme.
6. **Steam**
   This function adds a steam wash feature to the washing programme.
   Before starting the programme, press this button to activate the function. The " " icon will illuminate when the function is enabled.
   Press the button again to deactivate the function.
   Some programmes include this function by default and cannot be deselected.

Functions

Simple everyday use

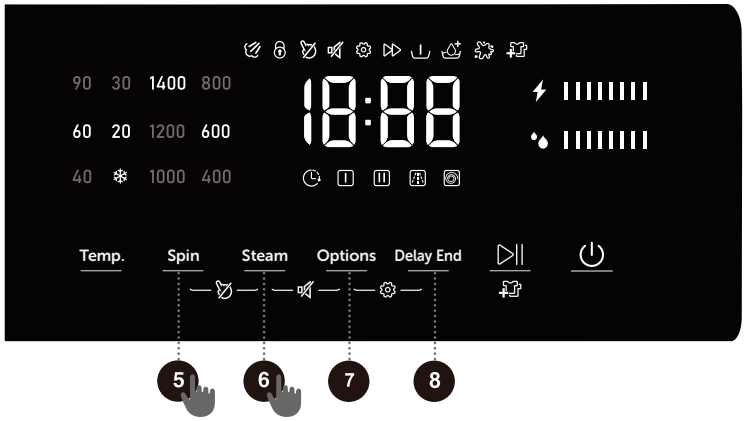

7 **Option**

This function enables the selection of an additional function prior to programme start. Each press selects one function only, and the corresponding icon will flash to confirm selection. The setting cannot be modified after the programme has started.

Quicker

This function reduces programme duration and accelerates the washing process.
On programmes with automatic load weighing, enabling this function will cancel the weighing operation. Automatic weighing will resume once the function is switched off.

Pre-wash

This function adds a prewash period before the main wash phase. Generally used when clothes are quite dirty. When this function is selected, add detergent to the prewash compartment of the detergent drawer.

Extra Rinse

This function increases the number of rinses for the programme.. By adding an extra rinse, the programme will perform an additional rinse cycle before softening, and the total programme running time will be increased accordingly.

Intensive

This function extends the intensive wash time to enhance cleaning performance.

8 **Delay End**

This function allows the programme end time to be delayed for convenient laundry scheduling.
After selecting the desired programme and functions, press this button to activate the delay end function.
Press the button repeatedly to cycle through the available delay times; each press increases the delay by 1 hour, up to a maximum of 24 hours.

The set delay time represents the programme end time, including the total programme duration. Therefore, the selected delay time must be longer than the programme running time.
After setting the delay end time, press the Start/Pause button to begin the delay end operation.
During the delay period, the remaining time until the programme finishes will be shown on the display.
If the delay end function is set before the programme starts, it can be cancelled by selecting another programme or function. Once the programme has started, the delay end function can only be cancelled by switching off and restarting the appliance.

5 + 6 **Child Lock**

To prevent accidental operation by children and ensure safety, the appliance is equipped with a Child Lock function.
To activate the Child Lock, press and hold the "Spin" and "Steam" buttons simultaneously until the Child Lock icon ' ' illuminates.
To deactivate the Child Lock, repeat the same operation until the icon turns off.
When the Child Lock is enabled, all buttons and knob operations are locked, except for pressing the power button to switch off the appliance and using the "Spin+Steam" buttons to release the lock.
The Child Lock remains active after the programme ends or if the appliance is switched off and restarted. The Child Lock icon ' ' will be displayed when the appliance is powered on again. To operate the appliance, press and hold the "Spin+Steam" buttons to deactivate the Child Lock.

If you require any technical guidance or find that your product is not operating as intended, a simple solution can often be found in the **Troubleshooting** section of these instructions,

Functions

Simple everyday use

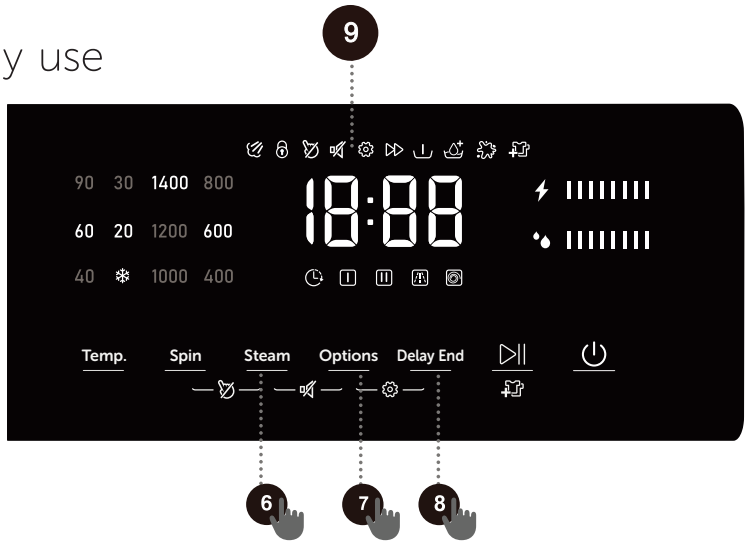

6 + 7 Mute

This function mutes all operating sounds except alarm tones to reduce noise.
When the appliance is in standby, pause, or operating mode, press and hold the "Steam" and "Option" buttons simultaneously until the mute icon " " illuminates, indicating that the mute function is activated.
When enabled, all sounds from the appliance are muted except alarm sounds.
To deactivate the mute function, repeat the same operation until the mute icon turns off.

7 + 8 Cleaning reminder

This function is used to switch the Cleaning Reminder feature on or off. The function is enabled by default. Before starting a programme, press and hold the "Option" and "Delay End" buttons simultaneously for 7 seconds.
The display will show "UoF", indicating that the cleaning reminder function is switched off. Repeat the same operation. The display will show "Uon", indicating that the cleaning reminder function is switched on. When the function is enabled, the appliance will issue a cleaning reminder every 60 programme cycles. The display will show "U01" (flashing for 5 seconds), and the cleaning indicator " " will remain illuminated. At this time, you may clean the drain pump filter, door seal, water inlet valve filter, and detergent drawer separately, and then run the "Drum Clean" programme to complete appliance cleaning and descaling.
If you do not wish to perform cleaning at that time, briefly press the "Option" and "Delay End" buttons simultaneously to cancel the cleaning reminder.
After running the "Drum Clean" programme or cancelling the cleaning reminder, the cycle counter will reset and the programme count will restart.

9 Display

Used to display the remaining time of the programme, delay time, fault code, and other related information.

Icon description

	Door lock indicator: When the door is locked, this icon illuminates. Do not attempt to open the door while the icon is lit, as this may result in injury.
	Add Clothes indicator: When this icon illuminates, the door can be opened to add laundry.
	Electricity consumption indicator: Displays the estimated electricity consumption for the selected programme.
	Water consumption indicator: Displays the estimated water consumption for the selected programme.

Functions

Simple everyday use

Function selection table

Programme	Temp.	Spin	Steam	Quicker	Pre-wash	Extra Rinse	Intensive	Delay End	Child Lock	Mute
Eco 40~60	-	•	-	-	-	-	-	•	•	•
20°C	-	•	-	-	•	•	•	•	•	•
Cotton	•	•	•	•	•	•	•	•	•	•
Synthetics	•	•	•	•	•	•	•	•	•	•
Mixed	•	•	-	•	•	•	•	•	•	•
Quick 15'	•	•	-	-	-	•	-	•	•	•
Speed 49/30'	•	•	-	•	•	•	-	•	•	•
Drum Clean	-	-	-	-	-	-	-	•	•	•
Rinse+Spin	-	•	-	-	-	•	-	•	•	•
Spin Only	-	•	-	-	-	-	-	•	•	•
Wool	•	•	-	-	-	•	-	•	•	•
Sports	•	•	-	-	•	•	•	•	•	•
Baby Wear	•	•	o	•	•	•	•	•	•	•
Anti-Allergy	-	•	o	-	•	•	•	•	•	•

• The function is optional
- The function is not optional
o The function is included by default and cannot be canceled

If you require any technical guidance or find that your product is not operating as intended, a simple solution can often be found in the **Troubleshooting** section of these instructions,

Functions

Simple everyday use

Start the programme

Select the programme and additional functions, and make sure that the detergent has been added to the detergent drawer. Press the "**Start/Pause**" button to start the programme.

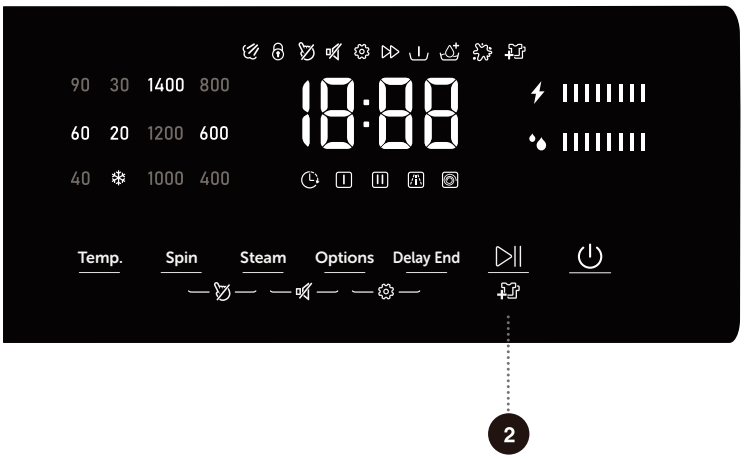

After pressing the Start/Pause button, programme settings cannot be changed, except for switching the Child Lock on or off and turning Mute on or off.

When the programme starts, if the display shows "---", this indicates that the laundry load is being weighed. For certain programmes, the appliance automatically detects the load weight before washing and adjusts the programme duration accordingly.

End of the programme

When the programme finishes, an acoustic signal sounds and "End" appears on the display. If no operation is performed for a certain period, the appliance will switch off automatically.

1. Switch off the appliance.
2. Turn off the water tap.
3. Unplug the power cord from the socket.
4. Open the machine door.
5. Remove the laundry from the drum.

ENTER THE AFTER-SALES QUERY MODE

1. In the OFF mode, press the "Temp." + "Steam" + "⏻" to enter the after-sales inquiry mode.
2. It displays the number of operation cycles.
3. Press "Steam" to switch cycles or fault codes.
4. When querying fault codes, press the "Temp." to page up and the "Spin" to page down.
5. Press the "⏻" button for 3 seconds, you will exit query mode.

Simple everyday use

programmeinterruptions and changes

Interrupt procedure

To interrupt or cancel a programme while it is running, you need to turn off the power of the appliance.

Change programme

If you want to change the programme while it is running, you need to turn off the power of the appliance first; After powering on, reselect the programme and additional functions, and press the **Start**/Pause button to start.

Pause the programme

You can press the**Start**/Pause button to pause the programme at any time during the programme operation. If the following conditions are met, the door lock is unlocked and the machine door can be opened.

1. The temperature in the drum must be suitable;
2. The water level in the drum must be below a specific value.

To resume the programme, please close the door first, and then press the "**Start**/Pause" button. The wash programme is paused and started again, and the programme continues from where it was interrupted. The spin programme is paused, and when it is restarted, the programme will start from the beginning of the spin cycle.

Add Clothes

To add garments during a programme, first make sure the water level and temperature inside the drum are safe. Press the Start/Pause button to pause the programme.
The remaining time on the display will flash, and the door lock icon will turn off ,the “Add Garment” icon “ ” will light up.You may then open the door to add garments.
If the door lock icon does not turn off, the door cannot be opened. Do not add laundry mid-cycle.

If too much extra clothing is added during the washing process and the amount of water is insufficient, the cleaning effect will be poor, because the appliance calculates the amount of water intake based on the weight of the initial clothing. Insufficient water may also cause damage to the clothing (due to friction), and the washing time will be prolonged.

Fault

If the appliance fails, the programme will be interrupted.
If this happens (see "FAULT CODES AND TROUBLESHOOTING")

Power failure

In the event of a power failure (blackout), the washing programme will be interrupted. When the power supply is restored, the programme will continue running from the stage where it was interrupted.

If there is still water in the appliance after a poweroutage, do not open the door before manuallydraining the water using the drain pump filter.

If you require any technical guidance or find that your product is not operating as intended, a simple solution can often be found in the **Troubleshooting** section of these instructions,

Functions

Simple everyday use

Program Selection Guide - 11kg washing machine (BWM111400W / BWM111400B)

Programme	Max. Load (kg)	Detergent Compartment			Wash Programme Functions			Max. Water Temp. (°C)	Washing time (h:mm)	Maximum spin speed (rpm)
		Prewash	Main wash	Softener	Delay	Extra rinse	Pre-wash			
Cotton	11.0	○	●	●	○	○	○	90	3:38	1400
Allergy	2.0	○	●	●	○	○	○	60	2:11	1400
Synthetic	5.5	○	●	●	○	○	○	60	2:45	1400
Mixed	5.5	○	●	●	○	○	○	60	0:58	1400
Eco 40-60	11.0	×	●	●	○	×	×	–	3:59	1400
20℃	11.0	○	●	●	○	○	○	20	1:50	1400
Spin only	11.0	×	×	×	○	×	×	–	0:12	1400
Rinse+Spin	11.0	×	×	●	○	○	×	–	0:30	1400
Baby Wear	2.0	●	●	●	○	○	●	90	2:30	1400
Wool	2.0	●	●	●	○	○	●	40	0:55	600
Sports	4.5	×	●	●	○	○	×	40	0:58	1000
Speed49/30'	4.5	○	●	●	○	○	○	40	0:49	1400
Quick	2.0	×	●	●	○	○	×	40	0:15	800
Drum Clean	- -	×	×	×	○	×	×	90	1:10	800

● Means must ○ Means optional × Means not necessary

Note: Actual water and energy consumption, as well as programme duration, may vary from the values shown in the table. Variations may occur due to differences in water pressure, water hardness and temperature, ambient temperature, load type and size, selected auxiliary functions, and fluctuations in the power supply.

Using your washing machine

5

Using your washing machine

Getting the most from your appliance

Organising Laundry

- Read the washing label on each garment to help you sort your washing into different loads.
- Sort the laundry by colour, type of fabric and by how soiled it is. This will help you choose the correct programme and temperature for each wash.

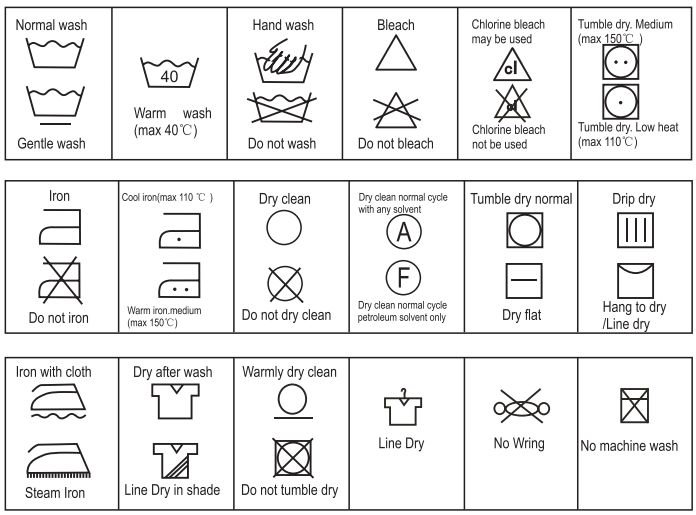

- Do not exceed the maximum load! See the programme selection table for the maximum load for the programme you require.

Articles / clothes	Approx. weight(g)
Cotton quilt covers (single/double)	900/1500
Bed sheets (single/double)	600/900
Work clothes	1120
Large tablecloths	700
Small tablecloths	350
Tea napkins	100
Bath towels	700
Hand towels	300
Blouses	150
Cotton shirts	300
shirts	180
cotton dresses	500
Jeans	800
Jacket	800
Handkerchiefs	100
T-shirts	150
Shorts	70
Socks	50

Preparing Laundry

- Treat stains before washing.
- Some items should be put into a cleaning net before going into the washing machine. i.e. bras with metal wires, tights and lace clothing to prevent damage.
- Check that pockets do not contain any objects which may damage your clothes and the washing machine.
- Tie up any loose strings on laundry, close zippers and reverse clothing with zips inside out.
- To prevent any large, heavy objects (e.g., buckles, large buttons, etc.) from hitting the glass door, turn your clothing inside out, or remove the heavy objects. These could damage your laundry or the washing machine.
- Remove any surplus hair, animal fur, sand, and other materials with a brush before washing.
- If clothes have raised fabric turn them inside out.
- Clothes that are not colour fast should be washed separately.
- Insert your clothes into the washing machine.
- Close the washing machine door. Ensure that you do not trap any items of clothing between the loading door and the rubber seal.

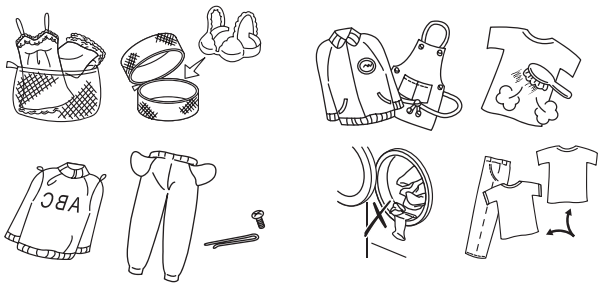

If you require any technical guidance or find that your product is not operating as intended, a simple solution can often be found in the **Troubleshooting** section of these instructions,

Using your washing machine

Getting the most from your appliance

Adding Detergent and Softener

- Add detergent into the appropriate dispenser.
- Apply softener before you start washing.
- Apply detergent and softener according to the washing amount, the soiling level, the water hardness in your area and the manufacturer's instructions of these products.

Dilute viscous fabric softener and fabric conditioner with water. Prevent blockage of the overflow. Maximum level is 40ml.

Prewash compartment

Main wash compartment

Softener compartment

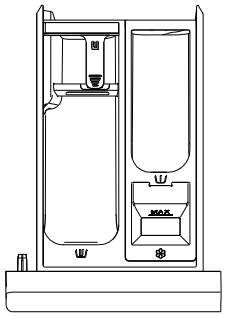

- Do not use the washing machine when the detergent drawer is removed. It may cause a water leak or it may not work normally.
- If you forget to add detergent, you can drain the washing machine by running a drain only programme. Then you can add detergent and start the programme again.
- Detergent only reaches the drum when water flushes through the detergent drawer.
- To prevent powder detergent staying in the drawer, dry the inside of the drawer with a cloth. Make sure the powder isn't lumpy when you add it into the drawer.
- If the rinse cycle isn't removing all the detergent from your wash, use less detergent .
- Softener should not exceed the MAX level in the compartment.
  Wash out unused softener with a splash of water or a damp cloth after the programme has finished.

Before First Use

- Prior to the first use of the appliance, it is recommended to run a wash programme without clothes. A small amount of washing detergent should be used.

Wash Setting

Standard Washing

1. Pull the door handle and put the laundry in the drum. (Refer to Preparation to sort your laundry before it goes into the drum.) Make sure no washing gets caught in the door.
2. Close the door.
3. Turn the Programme selection dial to select your wash programme.
4. Select the temperature if desired.
5. Add detergent into the detergent drawer. The quantity of detergent will depend on the amount of laundry, the degree of soiling and the water hardness. Use the amount of detergent suggested on the packaging.
6. Press the Start/Pause button to start the washing.
7. The washing machine will sound when the programme is complete.

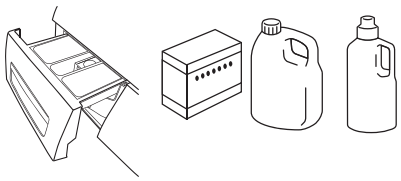

Using your washing machine

Getting the most from your appliance

Recommended washing detergent	Wash cycles	Washing temp.	Type of laundry and textile
Heavy-duty detergent with bleaching agents and optical brighteners	Cotton,ECO 40-60	20/40	White laundry made from boil-proof cotton or linen
Colour detergent without bleaching agent and optical brighteners	Cotton	20/40	Coloured laundry made from cotton or linen
Color or mild detergent without optical brighteners	Cotton, Synthetic	20/40	Coloured laundry made from easy care fibres or synthetic materials
Mild washing detergent	Synthetic	20	Delicate textiles, silk, viscose
Special wool detergent	Wool	20/40	Wool

- Agglomerating or ropy detergent or additive can be diluted in some water before pouring it into the detergent dispenser, to avoid its inlet to get blocked and thus cause a water overflow.
- Please choose the suitable type of detergent to get a maximum of washing performance and a minimum of water and energy consumption
- To achieve the best cleaning result a proper detergent dosing is important.
- Use a reduced detergent amount if the drum is not filled completely.
- Always adjust the amount of detergent to the water hardness, if your tap water is soft, use less detergent.
- Dose according to how dirty your laundry is, less dirty clothes require less detergent.
- Highly concentrated (compact detergent) requires particularly accurate dosing.

Following symptoms are a sign of detergent overdosing:
- heavy foam formation
- poor washing and rinsing result

Following symptoms are a sign of detergent underdosing:
- laundry turns grey
- built-up of limescale deposits on the drum, the heating element and/or the laundry

If you require any technical guidance or find that your product is not operating as intended, a simple solution can often be found in the **Troubleshooting** section of these instructions,

Using your washing machine

Getting the most from your appliance

Removing Washing (Once programme is fnished)

- Open the washing machine door and remove your washing.
- Remove any foreign objects to avoid risk of rusting.
- Leave the door and detergent drawer open so that residual water can evaporate.

1.Changing the selection after the program started?

The child lock status will remain activated after reset/power off/ washing end, and it will be only be deactivated by pressing the dedicated buttons simultaneously.

2.Adding/removing laundry in pause mode?

Press Start/Pause button, wait until the drum stops rotating;the door lock icon turns off; and the Add Clothes indicator illuminates.When the door lock is unlocked, you can add/remove laundry and repress Start/Pause button after close the door.

CAUTION: Risk of Scalding.
When you are washing at high temperatures, there is a risk of scalding if you come into contact with hot water or steam.

3.Door lock

The icon lock will light up automatically once the program starts. The door lock icon will fade out as soon as the program ends and the door will be allowed to open automatically.

4.End of program

A beep sounds at the end of the programme, and the display shows “End”.

Using your washing machine

Getting the most from your appliance

Quick start

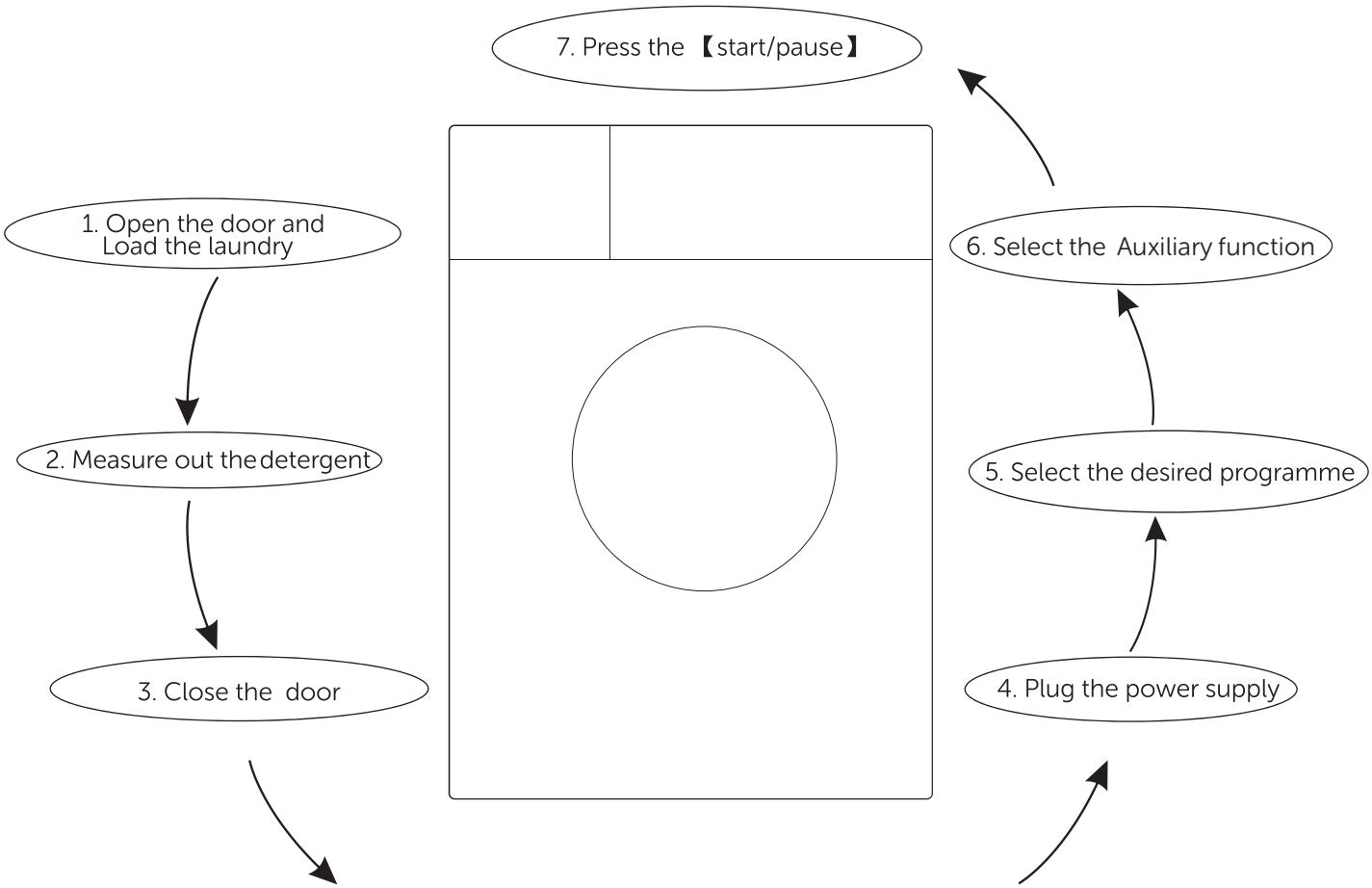

After washing :

1.The machine will sound a beep.

2.It is recommend to close the water tap and pull out the power plug.

CAUTION: Do not overload the machine as it will get damaged while washing your clothes.

If you require any technical guidance or find that your product is not operating as intended, a simple solution can often be found in the **Troubleshooting** section of these instructions,

6 Care and maintenance

Care and maintenance

Looking after your appliance

Before your maintenance starts, disconnect the power, remove the plug from the supply and close the tap.

⚠

- Do not use solvents to clean the washing machine, as this may damage the unit and could generate toxic gases.
- Do not use the detergents containing PCMX to clean the washing machine.

Cleaning and Maintenance of Washing Machine Cabinet

- Correct maintenance on the washing machine can extend its working life. The surface can be cleaned with diluted nonabrasive neutral detergents when necessary. If there is any water overflow, use a wet cloth to wipe it off immediately.
- No sharp items are allowed to strike the cabinet.

Notes: Do not use formic acid and its diluted solvents or equivalent.

Clean Internal Drum

- Rust left inside the drum by metal articles shall be removed immediately with chlorine-free detergents.
- Never use steel wool.

Defrost a Frozen Washing Machine

When the temperature drops below zero and your washing machine gets frozen, you may:

1.Disconnect the power supply for the washing machine.
2.Wash the tap with warm water to loosen inlet pipe.
3.Take down inlet pipe and immerse it in warm water.
4.Pour warm water into washing drum and wait for 10 minutes.
5.Reconnect inlet pipe to the tap and check whether inlet and outlet are working normally.

Notes: when the washing machine is reused, make sure the ambient temperature is above 0˚C

Anti-freeze

If your washing machine is located in the room where it can get frozen easily, please drain the remaining water inside drain pipe and inlet pipe thoroughly.

Remove the remaining water in inlet pipe:

1.Close the tap.
2.Screw off the inlet pipe from tap and put its end into a container.
3.Start up any procedure except single Wash or Drain procedure. Water will be drained out of inlet pipe.
4.Reconnect the inlet pipe to tap.

Remove the remaining water in drain pump (Fig 14).

Fig 14

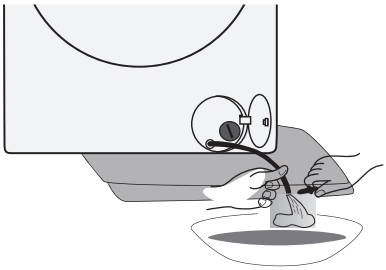

If you require any technical guidance or find that your product is not operating as intended, a simple solution can often be found in the **Troubleshooting** section of these instructions,

Care and maintenance

Looking after your appliance

Emergency door opening

If the door cannot be opened due to special reasons such as power failure, please use the door lock lever at the door cover of the pump to open the door urgently.

⚠ Note:

1. Please do not use this function when the appliance is operating normally.
2. Before operation, make sure that the inner drum has stopped rotating, that the water temperature is not high and that the water level is below the feeding port to avoid danger. If the water level is too high, drain the water through the drain hose (if any) or by slowly unscrewing the drain pump filter.
3. Operation method: Open the door cover of the drain pump, use the tool to pull down the door lock lever, and then open the door (as shown in the fig 15). After opening the door, please restore the door lock lever in time.

Door Lock Lever

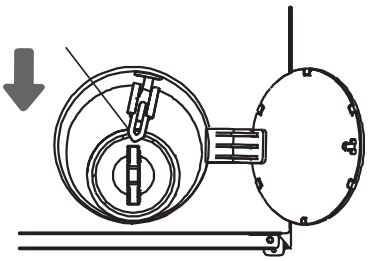

Fig 15

Maintenance & Cleaning

⚠ Regular maintenance can extend the appliance's service life. Before maintenance, please be sure to cut off the power supply and turn off the faucet.

⚠ Children are not allowed to clean or perform any maintenance work on this appliance without supervision.

Clean the detergent dispenser drawer

Clean the detergent dispenser drawer regularly.

1. Press the small tab inside the detergent drawer and pull the drawer out.
   (See the arrow in the right-hand fig 16 for the tab position.)
2. Clean the detergent drawer with a brush and rinse it under running water, then wipe it dry. Remove any detergent residue from the bottom of the housing, and then reinsert the drawer.

Do not place the detergent drawer in the dishwasher for cleaning.

CLEANING THE INLET FILTER

Check and clean the inlet filter regularly. Clean the inlet filter immediately if water supply is slow. Operation procedures are as follows:

1. Close the water tap and unscrew the water supply hose.
2. Remove the inlet filter.
3. Clean the inlet filter.
4. Reinstall the inlet filter.
5. Connect the water supply hose. Open the water tap and ensure there are no leaks at the connection.

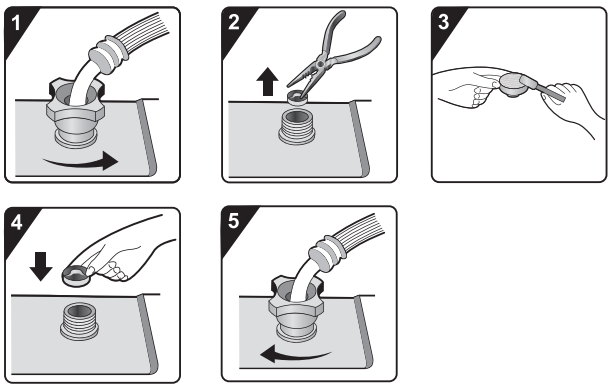

The inlet filter collects impurities and sediment from the water supply. It is recommended to clean it at least every six months, or more frequently if you have hard water or notice scale buildup.

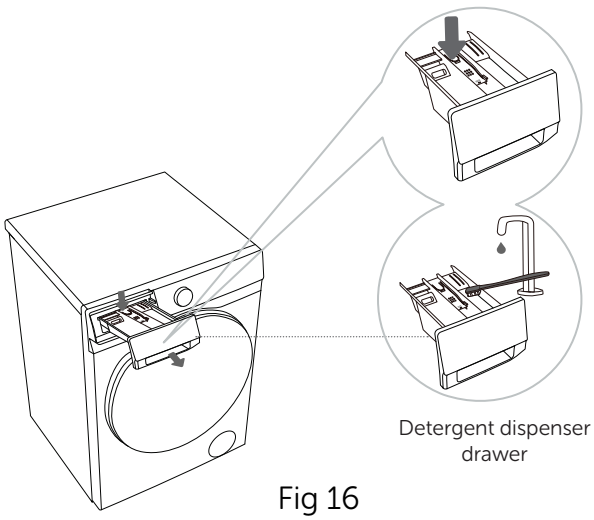

Fig 16

Care and maintenance

Looking after your appliance

Clean the water inlet hose, detergent drawer, outer compartment, and rubber door gasket

· Clean the water inlet hose filter regularly.
· Use a brush to clean the outer compartment of the detergent drawer, especially the nozzle located on the upper side of the compartment.
· After each wash, wipe the rubber door seal to extend its service life. Keep the door slightly open to allow moisture to evaporate, then close it to prevent mould from forming on the seal.

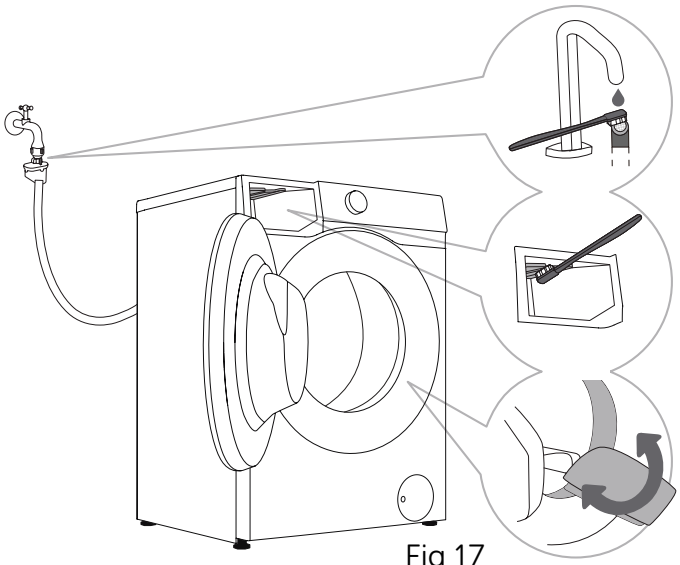

Fig 17

Cleaning the pump filter

· Water may spill when cleaning the pump filter. It is therefore recommended to place an absorbent cloth on the floor.

· Ensure the water has cooled down before releasing it from the appliance.

1. Open the pump filter cover.(Fig 18)
·Type 1: Press the pump filter cover to release and open it.
·Type 2: Use a suitable tool (such as a flat head screwdriver) to open the pump filter cover.
(Opening method varies depending on the model.)

2. Prepare for water drainage. Place a towel under the filter cover.(Fig 19)
·If the appliance is equipped with a drain hose, place the end of the hose into a suitable container. Turn the drain hose plug to loosen and remove it, allowing the water to drain naturally. Refit the plug once draining is complete.
·If no drain hose is provided, place a container directly under the pump filter.
(Configuration varies depending on the model.)

3. Drain the remaining water.(Fig 20)
Slowly rotate the pump filter counter clockwise and gently pull it out to allow the remaining water to drain gradually.

4. Clean the pump filter.(Fig 21)
Rinse the pump filter thoroughly under running water.

5. Reinstall the pump filter.(Fig 22)
Reinsert the pump filter as shown in the illustration and tighten it by rotating clockwise. Ensure the filter sealing surface is clean to guarantee a proper seal.

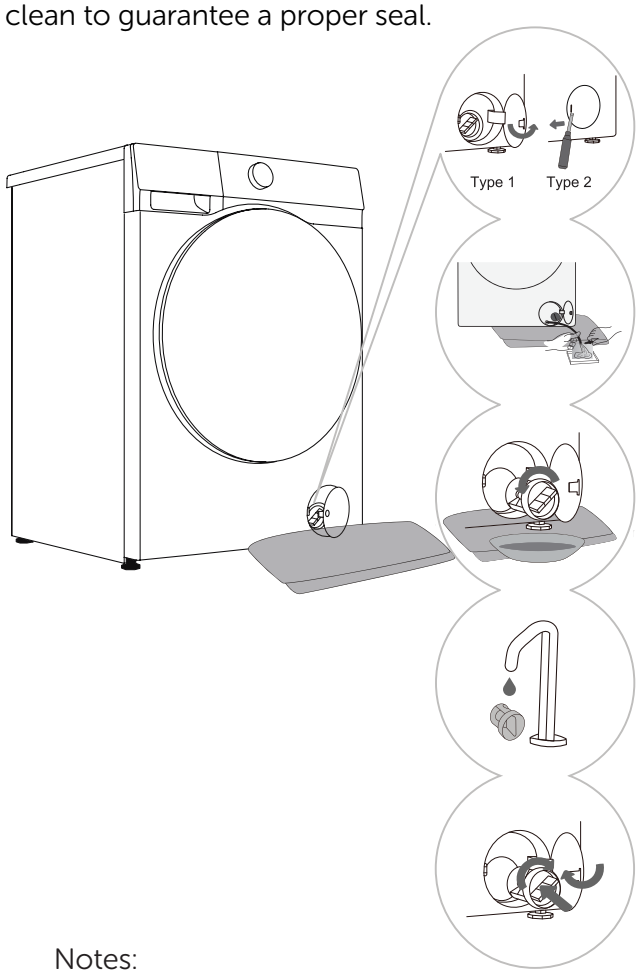

Fig 18

Fig 19

Fig 20

Fig 21

Fig 22

Notes:

· It is recommended to clean the pump filter every two months.

· Clean the pump filter after washing quilts, bath towels, or other lint-prone items.

· Also clean the pump filter if the appliance fails to start the spin cycle or if debris (such as buttons, coins, hairpins, or clips) is found in the pump.

· Do not open the pump filter while the appliance is operating. Always ensure the pump filter is securely reinstalled before using the appliance to prevent leaks or malfunctions.

If you require any technical guidance or find that your product is not operating as intended, a simple solution can often be found in the **Troubleshooting** section of these instructions,

Care and maintenance

Looking after your appliance

Technical specifcation

Model identifier: BWM111400W / BWM111400B

General product parameters:

Parameter	Value		Parameter	Value	
Rated capacity (b) (kg)	11.0		Dimensions in cm (a), (c)	Height	85
				Width	60
				Depth	67
Energy efficiency index (b) (EEIW)	36.7		Energy efficiency class (b)	A	
Washing efficiency index (b)	1.031		Rinsing effectiveness (g/kg) (b)	5.0	
Energy consumption in kWh per cycle, based on the eco 40-60 programme at a combination of full and partial loads. Actual energy consumption will depend on how the appliance is used.	0.374		Water consumption in litre per cycle, based on the eco 40-60 programme at a combination of full and partial loads. Actual water consumption will depend on how the appliance is used and on the hardness of the water.	48	
Maximum temperature inside the treated textile (b) (°C)	Rated capacity	29	Weighted remaining moisture content (b) (%)	53.9	
	Half	27			
	Quarter	23			
Spin speed (b) (rpm)	Rated capacity	1400	Spin-drying efficiency class (b)	B	
	Half	1400			
	Quarter	1400			
Programme duration (b) (h:min)	Rated capacity	3:59	Type	Free-standing	
	Half	3:00			
	Quarter	2:58			
Airborne acoustical noise emissions in the spinning phase (b) (dB(A) re 1 pW)	72		Airborne acoustical noise emission class (b) (spinning phase)	A	
Off-mode (W) (if applicable)	0.49		Standby mode (W) (if applicable)	N/A	
Delay start (W) (if applicable)	4.00		Networked standby (W) (if applicable)	N/A	

Minimum duration of the guarantee offered by the supplier (a), (c):	Not provided
This product has been designed to release silver ions during the washing cycle	No

Additional information (a), (c) :

Weblink to the supplier's website, where the information in point 9 of Annex II to Commission Regulation (EU) 2019/2023 [(1)] is found:

Weblink to the supplier's website, where the information in point 9 of Annex II to Commission Regulation (EU) 2019/2023 (1) (b) is found:

www.bush-support.com

([a]) this item shall not be considered relevant for the purposes of Article 2(6) of Regulation (EU) 2017/1369.
([b]) for the eco 40-60 programme.
([c]) changes to this item shall not be considered relevant for the purposes of paragraph 4 of Article 4 of Regulation (EU) 2017/1369.
([d]) if the product database automatically generates the definitive content of this cell, the supplier shall not enter these data.

Care and maintenance

Looking after your appliance

BWM111400W / BWM111400B

programme	Selected Temperature (℃)	Rated Capacity (kg)	Maximum temperature in drum (℃)	Program duration (h:min)	Energy consumption (kWh/cycle)	Water consumption (litres/cycle)	Remaining moisture content (%)	Maximum speed reached (rpm)
Eco 40-60 full load	-	11.0	29	3:59	0.658	68.0	53.90	1310
Eco 40-60 half load	-	5.5	27	3:00	0.405	50.0	53.90	1400
Eco 40-60 1/4 load	-	3.0	23	2:58	0.210	36.0	53.90	1400
20℃	20	11.0	20	1:50	0.320	120.0	55.00	1400
Cotton	60	11.0	56	3:38	2.400	140.0	55.00	1400
Synthetics	40	5.5	40	2:45	1.250	155.0	35.00	1400
Quick 15'	20	2.0	20	0:15	0.065	35.0	75.00	800

- The above data is for reference only, and the data may change due to different actual use conditions.
- The valves given for programmes other than the ECO 40-60 programme are indicative only.
- 20°C is able to clean lightly soiled cotton laundry, at a nominal temperature of 20 °C,which complies with the regulation (EU) 2019/2023.
- Concerning to EN 60456:2016 With (EU)2019/2014, (EU)2019/2023, (EU) 2021/340,(EU) No 2021/341

The EU energy efficiency class is: A
Energy test program: ECO 40-60. Other as the default.
Half load for 11.0Kg machine: 5.5Kg
Quarter load for 11.0Kg machine: 3.0Kg.

If you require any technical guidance or find that your product is not operating as intended, a simple solution can often be found in the **Troubleshooting** section of these instructions,

Care and maintenance

Special note for Eco design

1) Residual moisture after the wash cycle in water content percent and the spin speed at which this was achieved.

2) The ECO 40-60 programme is able to clean normally soiled cotton laundry declared to be washable at 40°C or 60°C, together in the same cycle. This programme is used to assess the compliance with the regulation (EU) 2019/2023.

The most efficient programmes in terms of energy consumption are generally those that perform at lower temperatures and longer duration.

Loading the household washing machine up to the capacity indicated for the respective programmes will contribute to energy and water savings.

Noise and remaining moisture content are influenced by the spinning speed: the higher the spinning speed in the spinning phase, the higher the noise and the lower the remaining moisture content.

Caution! If there is any break in the power supply while the machine is operating, a special memory stores the selected programme. The machine will continue the programme when the power supply is re-established.

The model information can be retrieved using the QR-Code reported in the energy label. The label also includes the model identifier that can be used to consult the portal of the registry at https://eprel.ec.europa.eu.

1. The higher the spinning speed in the spinning phase, the higher the noise and the lower the remaining moisture content.
2. The guarantee will be rendered invalid if the product has been damaged by inexpert repair.

Product support 7

Product support

Help is always at hand

Troubleshooting

The appliance is equipped with a number of automatic safety features to detect faults and take effective safety measures in a timely manner.
These faults are usually minor and can be rectified quickly.
If the appliance cannot operate normally, Please refer to the warning message for the appropriate action.
If the recommended troubleshooting methods do not ressolve the problem, please contact the customer helpline.
The user will assume all liability for any consequences arising from repairs carried out by themselves or unauthorised personnel.

Fault phenomenon	Recommended countermeasures
Machine fails to start	◇ Check whether the power cord is plugged into the socketand whether the socket is working functionally (by testing it with another appliance). ◇ Check whether the door is properly closed. ◇ Check whether the "Start/Pause" button is pressed.
Appliance stops operating under normal working conditions	◇ Check if the machine door is closed properly. If not, close the door, and press the "**Start**/Pause" button. ◇ Check if there is too much foam. When the appliance detects too much foam, it enters drainage or resting state, or water intake for defoaming treatment. At this time, the program pauses, and the screen displays the time unchanged. After defoaming is completed, the equipment will automatically resume operation. If foam overflow or water leakage is detected, please wipe off the foam to prevent corrosion of the appliance. ◇ Check whether safety protection is enabled on the appliance.
Time displayed at the start of the program increas-es or decreases	This is the adaptive adjustment of the appliance to the factors that influence the washing time. ◇ Excessive foam. ◇ Unbalance caused by large laundry. ◇ Extended heating time due to low water intake temperature. As a result of these factors, the remaining time displayed is recalculated and updated accordingly (if the appliance is makingan unbalance adjustment, the time displayed remains unchanged). In addition, the appliance detects the load during the water ssupply and adjusts the program time accordingly (fuzzy control).
Residual detergent or other additives in the detergent drawer after washing	◇ Check whether the detergent drawer is correctly installed and kept clean. ◇ Check whether the water pressure is normal and whether the inlet filter is clogged (see chapter "MAINTENANCE AND CLEANING").
Odour in the machine	◇ The odour may be caused by the rubber materials inside the appliance. It is the rubber smell, which dissipates after a few uses.
Abnormal sound/noise during washing	◇ Foreign objects such as keys, coins or pins may have fallen into the drum. Stop the appliance and check for foreign objects in the drum. If noise persists after restarting, please contact after-sales service. ◇ Laundry may be unevenly distributed in the drum. Pause the program, unlock the door, and redistribute the laundry.
Intense vibrations during spinning	◇ Check whether the appliance is level and whether all four feet are firmly seated on the floor. ◇ Check whether the transport screw/rods have been removed. Transport screw/rods must be removed before using the appliance. ◇ Check whether all foam supports have been removed from the bottom of the appliance.

The warranty does not cover the faults or failures resulting from externalctors (lightning strike, power grid failures, natural disasters etc.).

If you require any technical guidance or find that your product is not operating as intended, a simple solution can often be found in the **Troubleshooting** section of these instructions,

Product support

Help is always at hand

Fault phenomenon	Recommended countermeasures
Poor spinning effect	The appliance is equipped with a balance detection and correction system. After detecting unbalance caused by heavy laundry (e.g., bathrobes) and several spinning attempts, the system automatically reduces the spinning rate or even stops the spinning process to protect the appliance. ◇ If the laundry is still very wet after spinning, take the laundry out of the drum, shake it loose, and then select the spinning program again. ◇ Excessive foam may impair the spinning effect. Make sure to use an appropriate amount of low-foaming detergent. ◇ Check whether the spinning rate is set to "0" or "No Spin".
Water leakage	◇ Leak from the water supply hose. Check the connection between the tap and the water supply hose connector for leaks. If there is a leak, wrap sealing tape around the end of the tap or replace the tap. It is recommend-ed to check the connection between the water supply hose connector and the inlet valve for tightness. Tighten the connection to eliminate leaks. ◇ Leak from the drain hose. For top-drain models, the drain hose clips must not be removed as this will result in a continuous water discharge. ◇ Leak from the detergent drawer. The detergent drawer is not closed tightly. Push the handle to close the detergent drawer tightly. ◇ Leak from the door seal. Check the door seal for foreign objects and clean if necessary.
Wrinkled laundry	◇ The laundry is not removed promptly from the drum. After the wash cycle is completed, remove the laundry from the drum promptly. The appliance is overloaded. ◇ The drum should not be full of laundry and the door should be easy to close. The spinning rate is too high. ◇ Set a suitable spinning rate for the type of laundry.
Appliance does not carry out drying process	◇ Check whether the drying program is set up. ◇ Check whether the water tap is unopened. ◇ Check whether the door is properly closed. ◇ Check whether the load is excessive (see PROGRAM TABLE for capacity requirements), and take out part of the laundry to dry again.
Poor drying effect	◇ Check whether the load is excessive. If so, it will cause unsatisfactory drying effect and increased wrinkling. Separate the laundry in the drum for individual drying. ◇ Check if heavier items (e.g., thick cotton) are mixed with lighter ones (e.g., synthetic fabrics). ◇ Dry laundry separately by type.
Excessive drying time	◇ Check whether the load is excessive (see PROGRAM TABLE for capacity requirements), and take out part of the laundry to dry again. ◇ Laundry is not sufficiently spun (see section "Poor spinning effect" for guidance). ◇ A large amount of thicker laundry (e.g., jeans).
Odour during drying	◇ Using detergents or softeners with strong chemical odours may cause odours during drying. ◇ If the appliance is not thoroughly cleaned, residual dirt may produce odours while drying. Clean the appliance regularly (see chapter "MAINTENANCE AND CLEANING") and promptly remove laundry after drying.

or online at **www.argos-support.co.uk** If you still require further assistance, call one of our experts on **0345 257 7271**.

Product support

Help is always at hand

Fault codes and troubleshooting

When the appliance does not operate normally and the display shows the following code, it may not be a fault. Please refer to the content in the fault code and take the corresponding measures.

Description	Possible cause	Solution
F01	Water inlet fault	Check the following items: 1. Is the faucet turned on?Is the water pressure too low? 2. Is the water inlet hose pinched? 3. Is the water inlet hose filter clogged? 4. Is the water inlet hose frozen? After troubleshooting is finished, press the "Start/Pause" button to continue operation.
F03	Drainage failure	Check the following items: 1. Is the drain hose pinched? Is there water flowing in the hose? 2. Is the drain hose filter clogged? 3. Is the drain hose frozen? After troubleshooting is finished, press the "Start/Pause" button to continue operation.
F24	Overflow	Pause and restart the program. If the appliance continues to overflow, close the water tap and contact a service technician.
F13	Door locking fault	Door is closed, but it cannot be locked. Switch the appliance off and on again. Then restart the washing program. If the fault persists, contact a service technician.
F14	Door unlocking fault	Door is closed, but it cannot be unlocked. Switch the appliance off and then back on. If the fault persists, contact a service technician.
Other	Electronic module malfunction	Switch the appliance off and then back on. Restart the washing program. If the fault persists, contact a service technician.
Unb	Unbalance alarm	Unbalance alarm shall be solved by the following methods: 1.Laundry tangling If the laundry is tangled, first switch off the appliance, open the door, shake the laundry loose and put it back in the drum. Then close the door and select the spinning program again. 2.Underweighted laundry Switch off the appliance, open the door and load additional laundry (or one or two towels). Then close the door and select the spin program again.
F15-F18	Drying abnormality (applicable to models with drying function)	Turn the appliance off and then turn it on. If the fault still exists, please contact a service technician.

If you require any technical guidance or find that your product is not operating as intended, a simple solution can often be found in the **Troubleshooting** section of these instructions,

Product support

Help is always at hand

Help and assistance

If you require any technical guidance or find that your <washing machine> is not operating as intended, a simple solution can often be found in the **Troubleshooting** section of these instructions or online at

www.bush-support.com

If you still require further assistance, call one of our experts on **0345 257 7271*** To help give us give you a fast and efficient service please have the following information ready:

Model Ref.		You can find these on the rating plate - a small information panel (usually a sticker or metal plate) on the rear of your appliance
Serial number		
Date of purchase		This will be shown on your receipt

Local call rates applies*

Lines open 9am-6pm Monday to Saturday and 10am-6pm on Sunday.

*Calls to Argos enquiry lines may attract a charge and set up fee from residential lines depending on your call plan/tarif. Mobile and other providers costs may vary, see www.bt.com/pricing for details.

For Security and training purposes, telephone calls to and from customer service centres maybe recorded and monitored. Calls from Republic of Ireland will attract international call charges.

or online at **www.argos-support.co.uk** If you still require further assistance, call one of our experts on **0345 257 7271**.

Product support

Help is always at hand

Spare Parts Supply
To order spare parts, please contact our customer helpline: 0345 257 7271.
The original spare parts for some specific components are available for a period of 10 years, based on the type of component, from the placing on the market of the last unit of the model.

The appliance complies with the following EEC directives:
2014/35/EU Low voltage directive
2014/30/EU EMC directive

The appliance complies with the following UK legislation:
Electromagnetic Compatibility Regulations 2016
Electrical Equipment (Safety) Regulations 2016

Notes on disposal:

This marking indicates that this product should not be disposed with other household wastes throughout the UK. To prevent possible harm to the environment or human health from uncontrolled waste disposal,recycle it responsibly to promote the sustainable reuse of material resources.To return your used device,please use the collection systems or contact the retailer where the product was purchased. They may return and may take this product for environmental safe recycling.

If you require any technical guidance or find that your product is not operating as intended, a simple solution can often be found in the **Troubleshooting** section of these instructions,

Product support

Help is always at hand

BUSH

Call us now and activate your 12 month guarantee

Thank you for choosing Bush. Your new product is guaranteed against faults and breakdowns for 12 months. Don't forget to register it with us today so we can provide you with our best possible after-sales service and useful updates.

www.bushregistration.co.uk

FREEPHONE*

0800 597 8548

Lines are open 8am - 8pm, 365 days a year. *Calls may be recorded and monitored.

Your Bush Guarantee

This product is guaranteed for twelve months from the date of original purchase. Any defect that arises due to faulty materials or workmanship will be repaired free of charge (or if applicable the product will be replaced or the purchase price refunded) where possible during this period by the dealer from who your purchased the unit.

The guarantee is subject to the following provisions:

- The guarantee does not cover accidental damage, misuse, cabinet parts, knobs or consumable items.
- The product must be correctly installed and operated in accordance with the instructions contained in the manual.
- It must be used solely for domestic purposes. The guarantee will be rendered invalid if the product is re-sold or has been damaged by inexpert repair.
- Specifications are subject to change without notice.
- Bush disclaim any liability for loss or damage arising from the breakdown of the product.
- This guarantee is in addition to and does not diminish your statutory or legal rights.

Important Data Protection Information

To find out how we and Domestic & General Insurance Plc use your data please refer to the guarantee registration material or visit www.bushregistration.co.uk

Guarantor: Argos Limited – London – EC1M 6HA

or online at **www.argos-support.co.uk** If you still require further assistance, call one of our experts on **0345 257 7271**.

BUSH

Produced in China for
Argos Limited, London, EC1M 6HA, UK.
Argos (N.I.) Ltd., Forestside Shopping Centre,
Upper Galwally, Belfast, BT8 6FX, UK.

Contact:
www.argos-support.co.uk
www.bush-support.com
Helpline: **0345 257 7271**

20272666-N6020030159C