BUSH

Quick start guide

BHPTD10W
BHPTD10B

1 Safety Information

You''ll soon be enjoying your new appliance

You'll soon be enjoying your new Tumble Dryer.

This guide will help you get started, full details of your Tumble Dryer and its features can be found in the Instruction manual.

Safety Information

Your dryer is fitted with systems that continuously perform checks during the drying process to take the necessary measures and warn you in case of any malfunction.

- Do not block the ventilation grills found on the plinth of the tumble dryer.
- When the laundry is being washed, the spin speed should be at the highest level possible. This will shorten the drying time and reduce energy consumption.
- Cleaning the lint filter periodically after each use; provides your product to work energy efficiently and dry in a suitible times.
- Your product can reach high level of outer surface temperatures during the cycle.
- Please select the most suitible programme for preventing the over drying and creasing possibility of your laundries.
- If you do not take out the laundry after the programme has ended, the 1 hour Anti Crease phase will automatically be activated. This programme rotates the drum at regular intervals to prevent creases.
- Please use the time drying programmes for the one piece of laundry or for a couple of clothes. Because humidity sensor may can not detect the real humidity level for less laundry.
- Do not load your machine with over-wet clothes.
- To use the dryer on the washing machine, a fixing part must be used between the two products. The fixing part must be attached by an Authorised Service Provider.
- Please make sure that your water tank is empty before each drying use.
- You can hear a continuous fan sound during the drying process.
- Condensed water is pumped into the water tank periodically during the drying process. You can hear a splash voice during this while.
- You may hear a clatter sound caused by zippers, clasps and buttons of your clothes.
- In order to not to have a damp laundries problem, please dry your big (like duvets, etc.) and small sizes of laundries seperately.

2 Useful information concerning your Tumble Dryer

Bringing it all together

Hot laundries which come out after the drying process might be felt more damp than they really are.

SUITABLE FOR DRYING IN A DRYER	NOT SUITABLE FOR DRYING IN A DRYER
Suitable for drying in a dryer	Not suitable for drying in a dryer
At high temperatures	Hang wet to dry
At medium temperatures	Hang to dry
At low temperatures	Spread to dry

Follow the instructions on the labels of the laundry to be dried. Only dry items that have a statement/symbol that indicates "they can be dried in a dryer".

- **The programme used might not be suitable for the type of laundry.**

Check the care labels on the laundry items, select a suitable programme for the type of laundry and additionally, use the time programmes.

- **The surface of the lint filter might be clogged.Do not load your machine with over-wet clothes.**

Wash the filter with lukewarm water.

- **The heat exchanger might be clogged.**

Clean the heat exchanger.

- **The dryer might be overloaded with laundry.**

Do not overload the dryer.

- **The laundry might be insufficiently spun.**

Select a higher spin speed on your washing machine.

- **There might be a layer of lime on the humidity sensor.**

Clean the humidity sensor.

3 Using your Tumble Dryer for the first time

Let's get started

Programme Selection Table

Programme	Maximum capacity (kg)	Duration (minutes)	Laundries
ECO	10	225	Casual cotton textiles(sheets, pillowcasea, t-shirts, shirts, trousers, towels, etc).
Cotton	10	230	Casual cotton textiles(sheets, pillowcasea, t-shirts, shirts, trousers, towels, etc).
Synthetics	5	74	Casual synthetic textiles(t-shirts, shirts, blouses, covers, skirts, dresses, etc).
Refresh	-	-	1-2 pieces of clothing that need to be fresh and deodorized, you can change the time.
Wool	1	-	Machine-washable wool or containing wool.
Quick30'	1	30	Everday clothes made of cotton, cotton-synthetic blends and synthetic. ideal for light iteams, You can get drying clothes ready around 30 min.
Shirts	2	63	Shirts/blouses made of cotton, linen, or synthetic or blended fabrics.
Time Dry	-	-	It is the program where you can dry in any time between 1h-4.5h, suitable for drying indvidual iteams of laundry or thin fabrics.
Towels	5	180	Hard-wearing towels and dressing gowns made of cotton.
Bedding	2.5	176	1-2 set of Bed linen such as single and double sheets.
Downwear	2	123	Textiles stuffed or padded with down, for pillow, downwear, jackets.
Sportswear	2	76	Sportswear made of mixed materials and breathable fabrics.
Auto Dry	5	143	Everday clothes made of cotton， cotton-synthetic blends and synthetic. suggested for routine drying what you wash without sorting.
Baby Care	2	81	Baby clothes.
Allergy Care	2	-	Dries and sanitizes your garments and other items via high heat effect.

(*) Please check the Programme Selection and Consumption Table in the instruction book.

3 Using your Tumble Dryer for the first time

Let's get started

Programme Selection Knob*

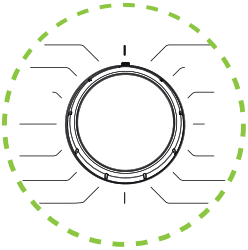

Use the programme selection knob to select the desired drying programme.

Electronic Additional Functions*

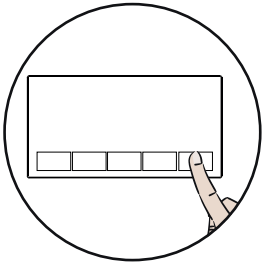

You can choose additional drying functions as needed. To start the program, simply press the Start/ Pause button.

* Functions and programmes can change according to the model of your product.

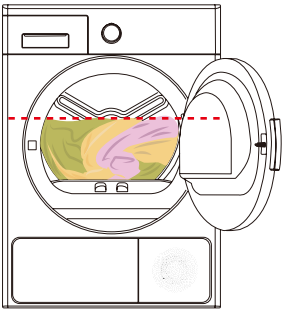

It is not recommended to load the dryer with more laundry than the amount shown in the figure. When overloaded the drying performance of the dryer will decrease and the dryer and laundry might be damaged.

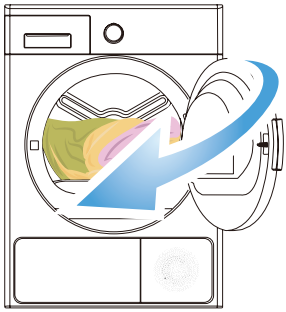

1.Separate your clothes according to their types, place into the machine and close the door.

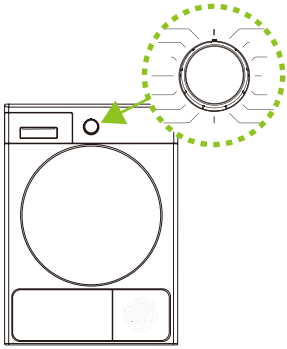

2.Select the suitable programme for your laundry by rotating the selection knob.

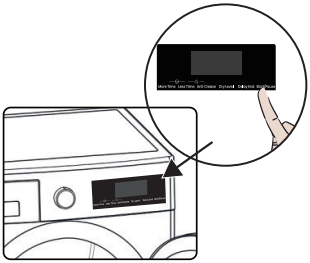

3. Start the programme by pressing Start/Pause button.

Care and maintenance

Looking after your appliance

CLEANING AND CARE

IMPORTANT: Always disconnect the dryer from the power mains before cleaning or maintenance.

IMPORTANT: Do not use industrial chemicals to clean your dryer. Do not use a dryer that has been cleaned with industrial chemicals.

IMPORTANT: DO NOT FORGET TO CLEAN THE LINT FILTER AFTER EACH USE.

CLEANING THE LINT FILTER

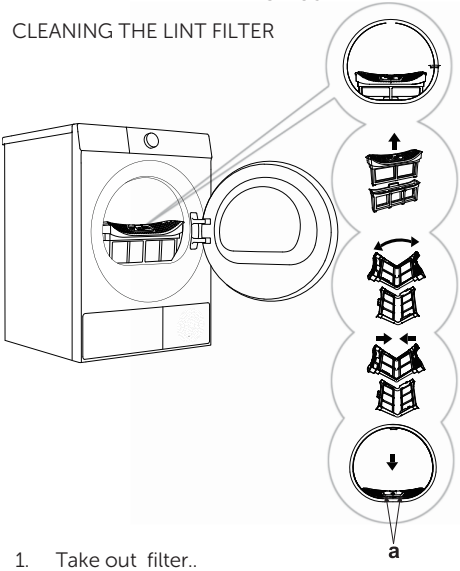

1. Take out filter..
2. Open filter.
3. Open and gently scrape off the lint,fibers and threads on the two filters (if the filter debris is difficult to clean manually, you can rinse it with warm water and dry it).
4. Reassemble the filter and clean the debris on the door seal if necessary.
5. Reinstall the filter (please install it with hole "a" facing you.).

After the dryer has been used for a certain period of time, if you encounter a layer which will obstruct the filter surface, wash the filter with warm water to clean. Dry the filter thoroughly before reinstalling it again.

CLEANING THE CONDENSED WATER CONTAINER

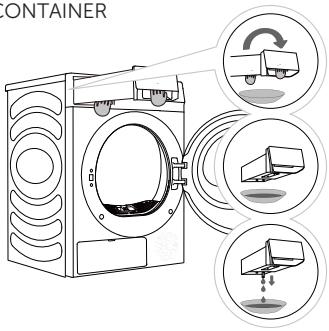

1. Pull out the condensed water container (using both hands, as shown in the figure).
2. Turn the condensed water container upside down over a basin, sink, or any suitable container.
3. Empty condensed water container.
4. Reinstall the condensed water container back to its original position.

IMPORTANT: Never remove the water container when the programme is running. The water condensed in the water container is not suitable for human consumption.

IMPORTANT: DO NOT FORGET TO EMPTY THE WATER CONTAINER AFTER EACH USE.

If the condensed water container is full, the drying program will automatically pause. Please follow the steps below to empty the condensed water container.

Empty the condensed water container after each drying cycle.

The water discharged from the condensed water container is not for drinking. After sufficient filtering, it can be used for ironing.

Do not add chemicals or fragrances to the condensed water container.

3 Using your Tumble Dryer for the first time

Care&Maintenance

THE HEAT EXCHANGER MUST BE CLEANED AFTER EVERY 5 DRYING CYCLES OR ONCE A MONTH.

If the drying process has completed, open the loading door and wait for it to cool down.

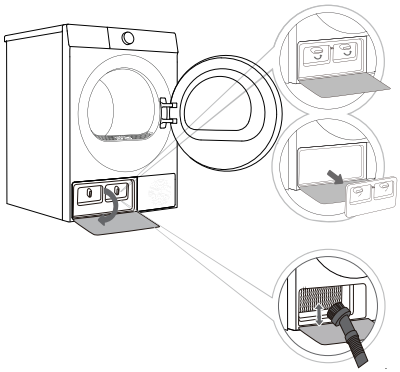

1.Press the heat exchanger door cover buckle on the lower left to open the door cover.

2.Turn the locking knob on the inner door cover to the unlocked position.

3.If after using for a period of time, there is dust on the heat exchanger, please use a vacuum cleaner, soft brush, or other tools to remove the dust. The heat exchanger can be seen after removing the inner door cover. Lightly brush the metal pieces with the brush, and the brush can only be moved from top to bottom. Excessive force may damage or bend the metal sheet. Do not touch the heat exchanger directly with your hands to avoid injury.

4.Install the inner door cover to its original position and lock the knob, close the heat exchanger door cover.

⚠ WARNING: DO NOT CLEAN THE EXCHANGER WITH BARE HANDS AS THE FINS ARE SHARP WHICH MAY INJURE OR CUT YOUR HANDS.

CLEANING THE HUMIDITY SENSOR

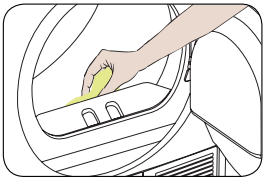

Inside the machine, there are humidity sensors that detect whether the laundry is dry or not. To clean the sensors:

1.Open the loading door of the machine.
2.If the machine is still hot due to the drying process, wait for it to cool down.
3.Using a soft cloth soaked in vinegar, wipe the metal surfaces of the sensor and dry them.

IMPORTANT: CLEAN THE METAL SURFACES OF THE SENSOR 4 TIMES A YEAR.
IMPORTANT: Do not use metal tools to clean the metal surfaces of the sensor.
⚠WARNING: Due to the risk or fire and explosion, do not use solution agents, cleaning agents or similar products when cleaning the sensors.

CLEANING THE INNER SURFACE OF THE LOADING DOOR

⚠ IMPORTANT: DO NOT FORGET TO CLEAN THE INNER SURFACE OF THE LOADING DOOR AFTER EACH DRYING PROCESS.

Open the loading door of the dryer and clean all of the inner surfaces and the gasket with a soft, damp cloth.

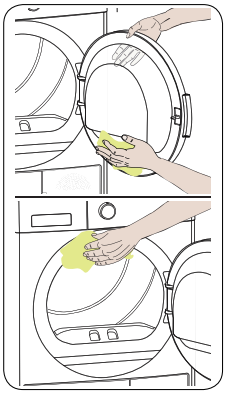

4 Troubleshooting

Help is always at hand

Help and assistance

If you require any technical guidance or find that your Tumble Dryer is not operating as intended, a simple solution can often be found in the **Troubleshooting** section of the instruction manual or online at **www.bush-support.com**

If you still require further assistance, call one of our experts on 0345 257 7271. To help us give you a fast and efficient service please have the following information ready:

Model Ref.

Serial number

You can find these on the rating plate - a small information panel (usually a sticker or metal plate) on the rear of your appliance

Date of purchase

This will be shown on your receipt

Local call rates applies*

Line opens 9am-6pm Monday to Saturday and 10am-6pm Sunday.

*Calls to Argos enquiry lines may attract a charge and set up fee from residential lines depending on your call plan/tariff. Mobile and other providers costs may vary, see www.bt.com/pricing for details.

For security and training purposes, telephone calls to and from customer service centres may be recorded and monitored. Calls from Republic of Ireland will attract international call charges.

BUSH

Contact:

Produced in China for

Argos Limited, London, EC1M 6HA, UK.

Argos (N.I.) Ltd, Forestside Shopping Centre, Upper Galwally, Belfast, BT8 6FX, UK.

www.argos-support.co.uk

www.bush-support.com

Helpline: 0345 257 7271

ISSUE-1 13/07/2026

20364085-N6020043928A