6FT SNOWY MIXED FROST TREE WITH BERRIES

Assembly Instruction - Please keep for future reference | 7272415

Dimensions

Width - **104 cm**
Depth - **104 cm**
Height - **182 cm**

Important – Please read these instructions fully before starting assembly

If you need help or have damaged or missing parts, call the **Customer Helpline: 03456 400800**

⚠ Safety and Care Advice

Important – Please read these instructions fully before starting assembly

- **PRODUCT IS INTENDED FOR INDOOR USE ONLY.**
- This product is not designed for permanent or long-term use.
- Do not use this product for any other purpose than its intended use.
- Do not allow the product near/ in contact with a source of heat or flame, e.g. gas or electric heaters, fireplaces, candles or other similar heat sources.
- Unplug the light chain (if any) when leaving the house, when retiring for the night, or if unattended.
- This product is for decoration use only, not to be used by children as a toy. Watch over them when near the tree.
- Ensure the tree is stable, place on a firm and level surface, away from where it may be knocked. Do not overload with excessively heavy decorations.
- Artificial trees are made from small fibres and have small parts which may pose a choking hazard detached from the branches. Keep out of reach of small children and pets.
- Before using or re-using, inspect the product carefully. Dispose of the products if any parts are damaged and have sharp points and edges.

Installation - Selecting a Location

- Decide on an appropriate location for your product, make sure that you have plenty of space, a level surface and a clean dry area for assembly and location. Always try to assemble the product as close as possible to the intended location.

Components

Please check you have all parts listed below

- 3 x tree sections
- 4 x plastic legs

No tools required

Assembly Instructions

1) Take out the tree bottom section, lift it up and push the legs into the corresponding slots (as per **Fig. 1**) until they click into position.

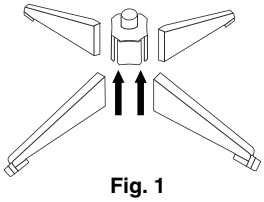

Fig. 1

2) Insert the middle tree section into the tree bottom, then insert the treetop into the middle section, as shown in **Fig. 2.**

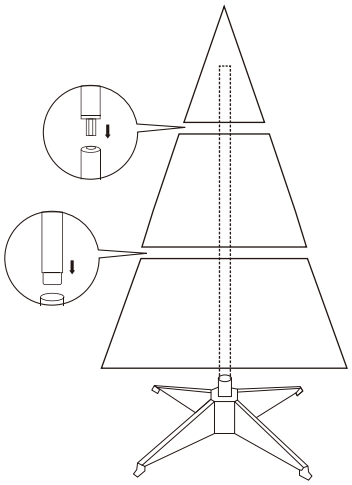

Fig. 2

3) Finally shape the tree by arranging the tips on the branches to give the desired effect. Some tree styles have “side branches” attached to the main branch stem that require additional shaping as shown in **Fig. 3**. After shaping the tree, the finished look should be natural and full.

Fig. 3

Storage

Before storing the product, carefully remove the product from wherever it is placed to avoid undue strain or stress on the product conductors, connections and wires.

- If you’ve attached the light string to the tree, unplug it from the power supply and remove the lights from the tree.
- Remove all decorations from the tree.
- Gather the branches upwards and secure them in place.
- Gently lift off the top and middle sections. Remove the tree legs from the tree base.
- Carefully place the tree in its box and tape it shut. **STORE THE PRODUCT IN A COOL AND DRY LOCATION PROTECTED FROM SUNLIGHT AND WHERE THE TEMPERATURE DOES NOT EXCEED 40˚C.**

Trouble Shooting

If you need help or have damaged or missing parts, call the **Customer Helpline: 03456 400800**

Made in China for Habitat, Argos Limited. Sainsbury's Supermarkets Ltd, London, EC1M 6HA, UK. Argos (N.I.) Ltd and Sainsbury's (NI) Ltd. Forestside Shopping Centre, Upper Galwally, Belfast, BT8 6FX, UK.

habitat.co.uk/help/contact-us