cookworks

1.5 Litre Rice Cooker

Model No. RC-8R



Care & Instruction Manual

For household and indoor use only

Please read these instructions before use and retain for future reference

YOUR HELPING HAND IN THE KITCHEN
cookworks
1 YEAR COOKWORKS GUARANTEE

ELECTRICAL SAFETY

- You should only plug the appliance into a 220V-240V AC, 50-60Hz supply. Connecting it to other power sources may damage the appliance and will invalidate the guarantee.
- This slow cooker is designed for domestic use. Don't use it in wet or damp locations.
- Switch off and unplug when not in use and before cleaning or moving the appliance.
- Keep the appliance and its cord out of reach of children less than 8 years.
- Do not allow children to use the appliance without supervision.
- This appliance can be used by children aged from 8 years and above and persons with reduced physical, sensory or mental capabilities or lack of experience and knowledge if they have been given supervision or instruction concerning use of the appliance in a safe way and understand the hazards involved. Children shall not play with the appliance. Cleaning and user maintenance shall not be made by children unless they are older than 8 and supervised.
- Keep the cooker housing, cable and plug dry and away from areas where it is likely to get splashed. Never immerse in water.
- Do not pull on the cable to disconnect from mains supply.
- Do not operate the slow cooker if damaged or after it malfunctions. In the event the supply cord is damaged, it must only be replaced by a qualified service engineer, with a suitably approved part.
- This appliance must be positioned so that the plug is accessible, and the plug socket is within easy reach of the power cord.
- The appliance is not intended to be operated by means of an external timer or a separate remote-control system.
- This appliance must be plugged into an earthed socket outlet.

WARNING!

- This appliance is intended exclusively for use in domestic households. It is not suitable for commercial use.
- Do not place the rice cooker housing on or near a hot gas or electric stove. Do not place in an oven.
- Do not cover and allow the rice cooker cool fully before storing.
-  The surfaces of the rice cooker are liable to become hot during and immediately after use; wear oven gloves when handling the appliance and long handled utensils when checking the food. The heating element is subject to residual heat after use.
- Do not use the rice cooker near or under surfaces that are heat sensitive or those that may be damaged by steam.
- Do not fill above maximum level marked (8 cups)
- To prevent burns, remove lid slowly and with the underside of lid angled away from you to allow any steam to escape gradually. Do not reach over the appliance while it is working.
- Only use with the parts provided and to cook rice.
- This appliance can cause personal injury if misused.

FOOD SAFETY

- Do not keep rice warming in the rice cooker for longer than 2 hours.
- If storing any excess rice, allow the rice to cool in a thin layer and refrigerate within 2 hours. Keep refrigerated and use within 2 days

PARTS

1. Lid handle
2. Glass lid (removable)
3. Cooking bowl (removable)
4. Handles
5. Warming indicator lamp
6. Cooking indicator lamp
7. Cooker housing
8. Control panel
9. Cook switch
10. On/Off switch
11. Power cable (not shown)
12. Spatula (not shown)
13. Measuring cup (not shown)

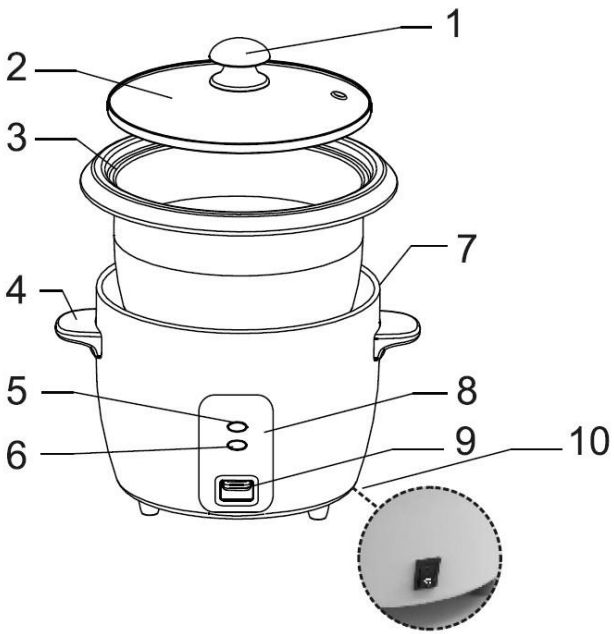

IMPORTANT:
The rice cooker housing is fitted with a pressure sensor and the cooking switch will not operate if the bowl is empty or the lid is not fitted. Always check that the cooking indicator lamp is illuminated after pressing the cook switch downward.

RICE COOKING TIPS

- Rice is a natural product and the results will vary depending on the type of rice used and according to personal preferences
- Follow the ratio of rice : water advised on the rice packaging.
- For fluffier rice, add a little extra water and for firmer rice add a little less.
- This rice cooker is best suited to cooking white rice. If using rice varieties with longer cooking times (e.g. brown rice) add extra water at the start to prolong the cooking time.
- Some rice may benefit from stirring towards the end of their cooking time to prevent burning.

TO USE

1. Before using for the first time. Wash loose parts (cooking bowl, lid, spatula and measuring cup) in hot water with a little washing up liquid. Rinse and dry thoroughly.
2. Place the cooker housing on a stable, flat, heat resistant surface and away from surfaces that may be damaged by steam.
3. Check that the On/Off switch on the side of the cooker housing is in the off (O) position.
4. Fully unwind the cable, plug in and switch on at the mains supply. For your safety do not allow the cable to dangle over the edge of units.
5. Using the measuring cup supplied, measure the required amount of **white rice** into a sieve.
   One cup = 150g rice approximately = 2 to 3 portions.
6. **Thoroughly rinse the rice before placing it in the cooking bowl.**
   Do not rinse the rice in the cooking bowl as the surface coating or underside of the bowl may become damaged.

TO USE (CONTINUED)

7. Pour cold water (or stock) into the cooking bowl up to the mark on the side of the bowl corresponding to the number of measuring cups used. Do not fill past the maximum (8 cups) or below the minimum (2 cups) level.
8. Ensure the outside off the cooking bowl is dry, place it into the cooker housing and fit the lid. Do not use the cooker without the lid fitted.
9. Move the On/Off switch to the on (I) position.
10. Press the cook switch downwards, the cooking indicator lamp will illuminate and cooking will begin.
11. After a few minutes the water will start to boil and steam will be emitted from the ventilation hole in the lid.
12. When the cook cycle is complete, the cooking switch will raise, the cooking indicator lamp will extinguish and the warming indicator will illuminate.
13. The cooking times will vary depending on the quantity and type of rice used; approximate cooking times are as follows for white rice.

    2 cups – 16 · 20 mins. 6 cups – 24 · 28 mins.
    4 cups – 20 · 24 mins. 8 cups – 28 · 34 mins.
14. For fluffy white rice, allow the rice to steam for 15 minutes before lifting the lid, stirring with the spatula provided and serving. Do not use metal spoons in the cooking bowl as these will damage the non-stick coating.
15. To turn off the rice cooker, move the On/Off switch to the off (O) position or disconnect from the mains supply.
16. For fluffy white rice, allow the rice to steam for 15 minutes before lifting the lid, stirring with the spatula provided and serving. Do not use metal spoons in the cooking bowl as these will damage the non-stick coating.
17. To turn off the rice cooker, move the On/Off switch to the off (O) position or disconnect from the mains supply.

CLEANING

Clean after each use.

1. Switch off and unplug the rice cooker and allow it to cool completely.
2. Wash loose parts (cooking bowl, lid spatula and measuring cup) in hot water with a little washing up liquid. Rinse and dry thoroughly. Not suitable for the dishwasher.
3. Wipe the external surface of the rice cooker housing with a soft damp cloth and dry surfaces with a soft dry cloth. Do not use detergent or abrasives as these may scratch the surface. Never immerse the cooker housing in water.

TECHNICAL SPECIFICATION

Cookworks 1.5 Litre Rice Cooker	
Model	RC–8R
Rated Voltage & Frequency	220 – 240V AC, 50 – 60Hz
Rated Power Input	500W
Class rating	I (earthed)
Power consumption (Off mode)	0W
BS 1362 fuse	10A
Product dimensions (external)	32 x 25 x 23.5 cm
Product weight (net)	1.9kg approx.
Cooking Capacity	1.5 Litres / 8 measuring cups

RECYCLING ELECTRICAL PRODUCTS



You should now recycle your waste electrical goods and in doing so help the environment.
This symbol means an electrical product should not be disposed of with normal household waste. Please ensure it is taken to a suitable facility for disposal when finished with. Visit www.recycle-more.co.uk, click on “bank locator” and enter your postcode to find your nearest recycling site.

PLUG / WIRING ADVICE

The wires in this mains lead are coloured in accordance with the following UK electrical code:

BLUE = NEUTRAL
BROWN = LIVE
GREEN + YELLOW = EARTH

Non-rewireable plug

This appliance may be fitted with a “non-rewireable” plug. If you need to change the fuse in a “non-rewireable” plug, the fuse cover must be refitted. If the fuse cover is lost or damaged, the appliance must not be used.

Rewireable plug

The colours of the wires in the mains lead of this appliance may not correspond with the coloured markings identifying the terminals in a rewireable plug. **Rewireable plugs should only be replaced by a suitably competent person. If in doubt, consult a qualified electrician.**

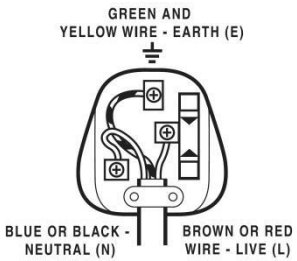

The BLUE wire must be connected to the terminal marked with the letter N

The BROWN wire must be connected to the terminal marked with the letter L

The GREEN & YELLOW wire must be connecting to the terminal marked with the letter E or the earth symbol ⏚.

Produced in China.	Argos Limited, London, EC1M 6HA, UK. Argos (N.I.) Ltd, Forestside Shopping Centre, Upper Galwally, Belfast, BT8 6FX, UK argos.co.uk/help/contact-us Tel: 0345 640 3030

PRODUCT GUARANTEE

This product is guaranteed against manufacturing defects for a period of



Year

This product is guaranteed for twelve months from the date of original purchase.

Any defect that arises due to faulty materials or workmanship will either be replaced, refunded or repaired free of charge where possible during this period by the dealer from whom you purchased the unit.

The guarantee is subject to the following provisions:

- The guarantee does not cover accidental damage, misuse, cabinet parts, knobs or consumable items.
- The product must be correctly installed and operated in accordance with the instructions contained in this manual. A replacement copy of this manual can be obtained from www.argos-support.co.uk
- It must be used solely for domestic purpose.
- The guarantee will be rendered invalid if the product is re-sold or has been damaged by inexpert repair.
- Specifications are subject to change without notice.
- The manufacturer disclaims any liability for the incidental or consequential damages.
- The guarantee is in addition to and does not diminish your statutory or legal rights.

Guarantor: Argos Ltd.
London
EC1M 6HA
argos.co.uk/help/contact-us