6FT PRELIT NORDLAND GREEN TREE

Assembly Instruction - Please keep for future reference | 7072907

Dimensions

Width - **104 cm**
Depth - **104 cm**
Height - **182 cm**

Important – Please read these instructions fully before starting assembly

If you need help or have damaged or missing parts, call the **Customer Helpline: 03456 400800**

⚠ Safety and Care Advice

Important – Please read these instructions fully before starting assembly

- **PRODUCT IS INTENDED FOR INDOOR USE ONLY.**
- Always plug the adaptor into an **INDOOR** mains socket.
- **This product is intended for use as a Christmas decoration only, and not suitable for household room illumination. WARNING. Do not use the product other than its intended use.**
- Never place the product near a wet location.
- Do not allow the product near/ in contact with a source of heat or flame, e.g. gas or electric heaters, fireplaces, candles or other similar heat sources.
- Do not cover the product with cloth, paper or any other material not part of the product when in use. e.g. curtains, nets or bedding.
- Do not connect the product to the power supply while the product is in the packaging.
- **This light set is constructed with non-replaceable LED lights, DO NOT attempt to replace any of the LED bulbs in the light set.**
- Only operate this product with the adaptor supplied.
- Do not connect the light set to any other light set by cutting or joining the sets together.
- Unplug the light chain when leaving the house, when retiring for the night, or if unattended.
- Do not secure the wiring with sharp hooks or nails. This can cut or damage the wire insulation.
- The external flexible cable or cord cannot be replaced. If part of light set or cable is damaged, the product MUST be destroyed.
- Do not let lamps rest on the supply cord or any other wire.
- To reduce risk of fire, do not deliberately reposition either lamp holder contact.
- This product is for decoration use only, not to be used by children as a toy. Watch over them when near the tree.
- Ensure tree is stable, place on a firm and level surface, away from where it may be knocked. Do not overload with excessively heavy decorations.
- Artificial trees are made from small fibres and have small parts which may pose a choking hazard detached from the branches. Keep out of reach of small children and pets.
- To avoid the risk of fire, burns, personal injury and electric shock it should not be played with or placed where small children can reach it.
- Please refer to the packing or product rating label for product class, specifications and rating.
- **IF YOU ARE IN ANY DOUBT ABOUT INSTALLING THIS PRODUCT, PLEASE CONSULT A QUALIFIED ELECTRICIAN.**
- Before using or re-using, inspect the product carefully. Dispose of the products if any parts are damaged or there is frayed wire insulation or cords, loose connections or exposed copper wire.
- Before storing the product, carefully remove the product from wherever it is placed to avoid undue strain or stress on the product conductors, connections and wires.

Installation - Selecting a Location

- Decide on an appropriate location for your product, make sure that you have plenty of space, a level surface and a clean dry area for assembly and location. Always try to assemble the product as close as possible to the intended location.

Components

Please check you have all parts listed below

- 3 x tree sections
- 4 x plastic legs
- 1 x adapter

No tools required

Assembly Instructions

1) Take out the tree bottom section, lift it up and push the legs into the corresponding slots (as per **Fig. 1**) until they click into position.

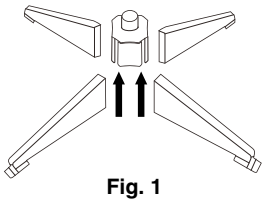

Fig. 1

2) Insert the middle tree section into the tree bottom, then insert the treetop into the middle section, as shown in **Fig. 2.**

3) The light chains are pre-decorated on the 3 sections of the tree.

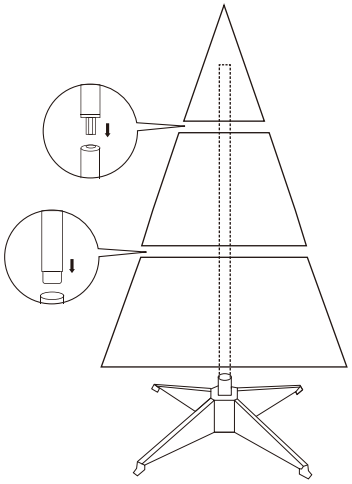

Fig. 2

4) Connect the chains by fitting the male and female connectors together. Then screw the plastic cap on. Ensure that the connectors are securely tightened (as per **Fig. 3**).

Fig. 3

5) Use the same method for connecting the lighting chain socket to the adaptor (as per **Fig. 4**). Then plug the adaptor into an **INDOOR** mains socket. Check that all the bulbs are lit.

Fig. 4

6) Finally shape the tree by arranging the tips on the branches to give the desired effect. Some tree styles have “side branches” attached to the main branch stem that require additional shaping as shown in **Fig. 5**. After shaping the tree, the finished look should be natural and full.

Fig. 5

Storage

Before storing the product, carefully remove the product from wherever it is placed to avoid undue strain or stress on the product conductors, connections and wires.

- Unplug the adaptor from the mains socket and remove all decorations from the tree.
- Unplug the light strings from the adaptor.
- Gently disconnect the cable connectors between the tree sections.
- Gently lift off the top and middle sections.
- Loosen the screw on the stand and lift the tree bottom section out of the stand. Flatten the metal stand.
- Carefully place the tree in its box and tape it shut. **STORE THE PRODUCT IN A COOL AND DRY LOCATION PROTECTED FROM SUNLIGHT AND WHERE THE TEMPERATURE DOES NOT EXCEED 40˚C.**

Trouble Shooting

If you need help or have damaged or missing parts, call the **Customer Helpline: 03456 400800**

Waste electrical products should not be disposed of with household waste.
Please recycle where facilities exist. Check with your local authority or retailer for recycling advice.

Made in China for Habitat, Argos Limited.
Sainsbury's Supermarkets Ltd, London,
EC1M 6HA, UK. Argos (N.I.) Ltd and
Sainsbury's (NI) Ltd. Forestside Shopping Centre,
Upper Galwally, Belfast, BT8 6FX, UK.

habitat.co.uk/help/contact-us