Amparo 4 Chairs

Assembly Instructions - Please keep for future reference

600/1443
600/6527
600/6352
600/6541
144/7569
259/3807
621/5136

hygena

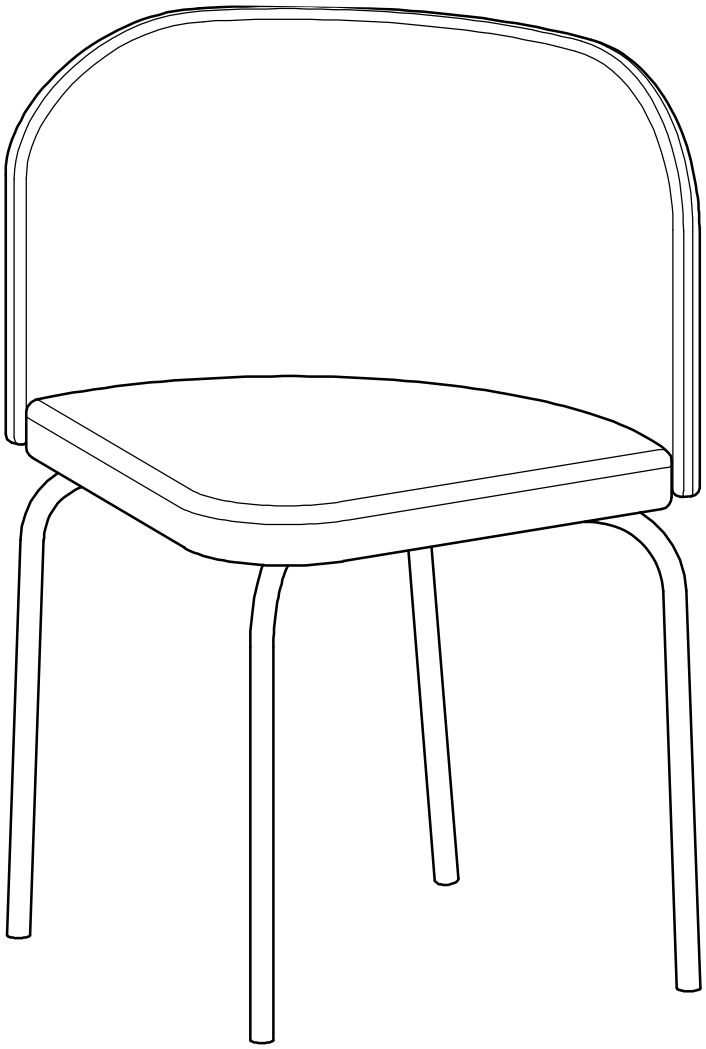

Dimensions

Width - 58cm
Depth - 49cm
Height - 75cm

Important – Please read these instructions fully before starting assembly

If you need help or have damaged or missing parts, call the **Customer Helpline:**
Argos = 0345 6400800

Issue 4 - 7/09/16

Safety and Care Advice

Important – Please read these instructions fully before starting assembly

• Check you have all the components and tools listed on the following pages.

• Remove all fittings from the plastic bags and separate them into their groups.

• Keep children and animals away from the work area, small parts could choke if swallowed.

• Make sure you have enough space to layout the parts before starting.

• During assembly do not stand or put weight on the product, this could cause damage.

• Assemble the item as close to its final position (in the same room) as possible.

• Assemble on a soft level surface to avoid damaging the unit or your floor.

• Parts of the assembly will be easier with 2 people.

• To reduce the likelihood of damaging your product please ensure that your power drill is set on a low torque setting.

• Do not stand on the chair.

• Do not use this chair as a step ladder.

• Maximun safe weight of user: 110kgs.

Care and maintenance

• Only clean using a damp cloth and mild detergent, do no use bleach or abrasive cleaners.

• From time to time check that there are no loose screws on this unit.

• This product should not be discarded with household waste. Take to your local authority waste disposal centre.

Handy Hints

• Assemble all parts and bolts loosely during assembly, only once the product is complete should you fully tighten the bolts

• Regularly check and ensure that all bolts and fittings are tightend properly.

Components - Panels

If you have damaged or missing components, call the
Customer Helpline: Argos = 0345 6400800

Please check you have all the panels listed below

The quantities below are for 4 chairs

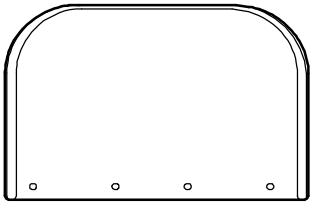

1 Chair back x 4
(54.2 x 34.7 cm)

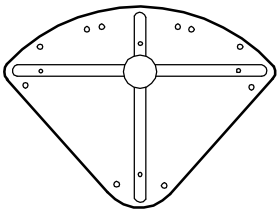

2 Chair seat x 4
(52.6 x 39.5 cm)

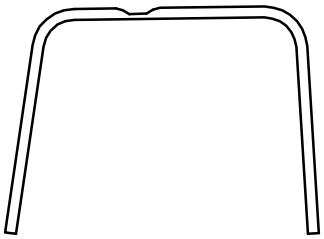

3 Chair leg x 4
(48.8 x 43.2 cm)

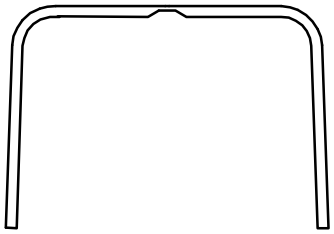

4 Chair leg x 4
(57.7 x 42.9 cm)

Components - Fittings

Please check you have all the fittings listed below

Note: The quantities below are the correct amount to complete the assembly of 4 chairs. In some cases more fittings may be supplied than are required.

A 64mm Bolt x 16	**B** 32mm Bolt x 16	**C** 28mm Bolt x 4
D Nut x 4	**E** Insert nut x 16	**F** Plain washer x 16
G Curved washer x 20	**H** Spring washer x 36	**I** Bolt cap x 16
J Wrench x 1	**K** Hex key x 1 (supplied in the fittings pack of table)	

Tools required

Flatblade screwdriver

Ruler - Use this ruler to help correctly identify the screws

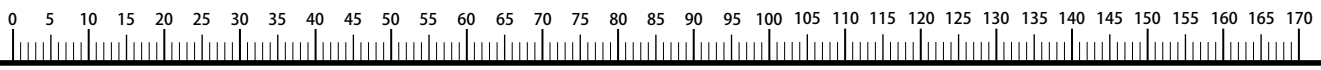

Assembly Instructions

Step 1

Assemble legs

Assemble chair leg 3 and 4 using bolt C, curved washer G, spring washer H and nut D.

***Note*: Do not fully tighten the bolts.**

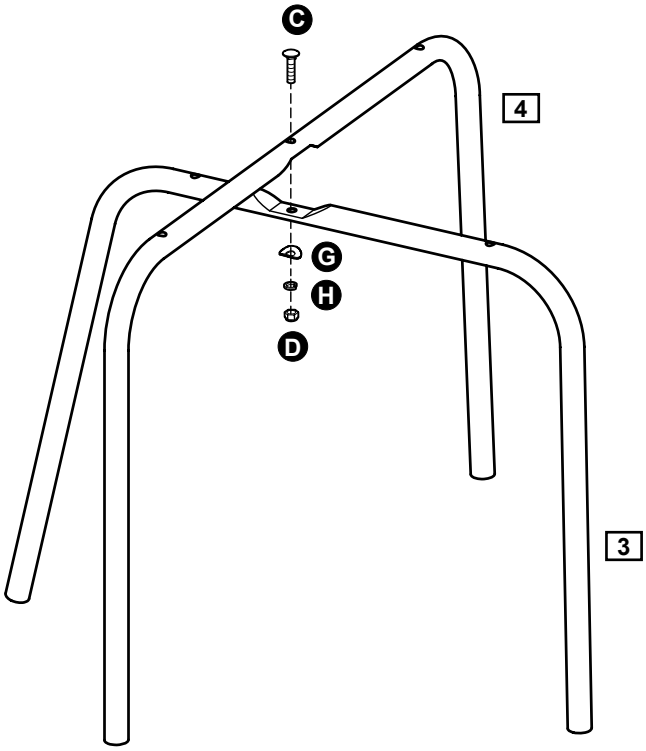

Step 2

Assemble seat and back

Two people are needed here

a: Place chair seat 2 upside down, put insert nuts E into the holes on the underside of the seat, make sure the threaded hole of the insert nut is aligned with the holes in the edge of the chair seat as shown in the figure.

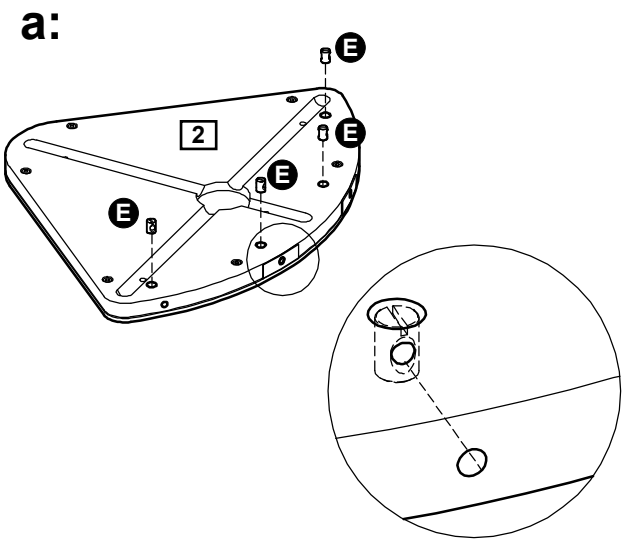

Continued on next page.

Step 2 - continued

b: Assemble chair back 1 to the seat using bolts A, spring washers H and plain washers F , and secure tightly by using hex key K.

***Note*:** Use a screwdriver to turn the insert nut slightly as shown in the figure if the bolt could not screw in.

b:

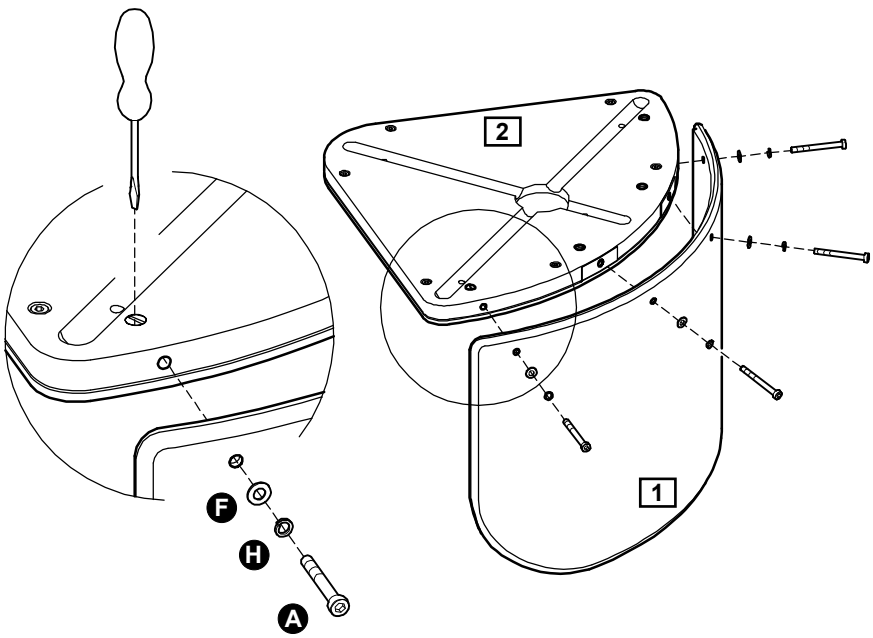

Step 3

Assemble legs

Fix the chair legs to the seat using bolts B, spring washers H and curved washers G .

***Note*: Re-tighten all the bolts and nuts.**

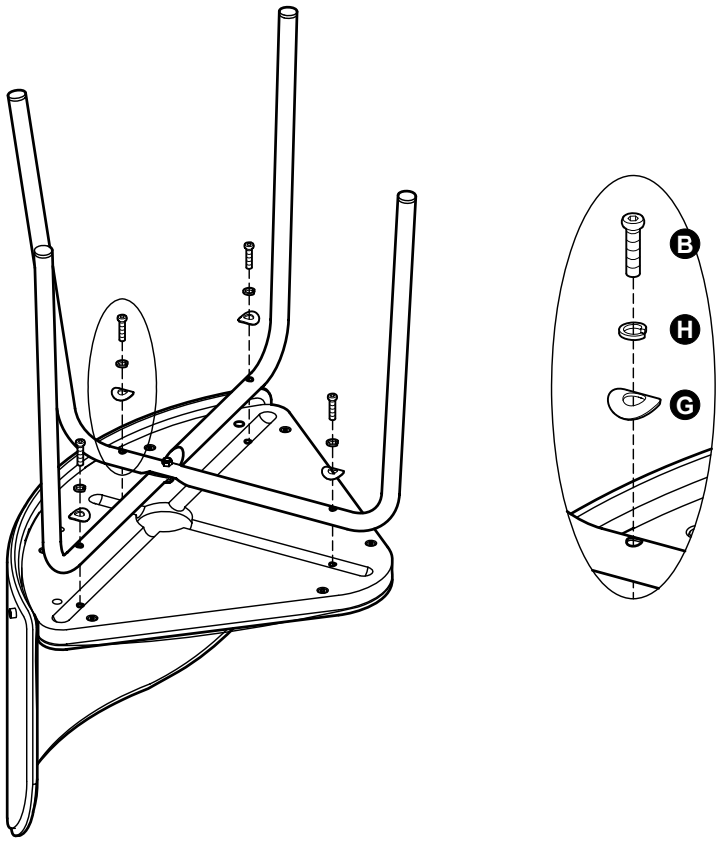

Assembly Instructions

Step 4

Assemble bolt cap

Turn the chair to back to its up- right position, then cover the bolts on the back of the chair with bolt caps I .

Assembly is complete.

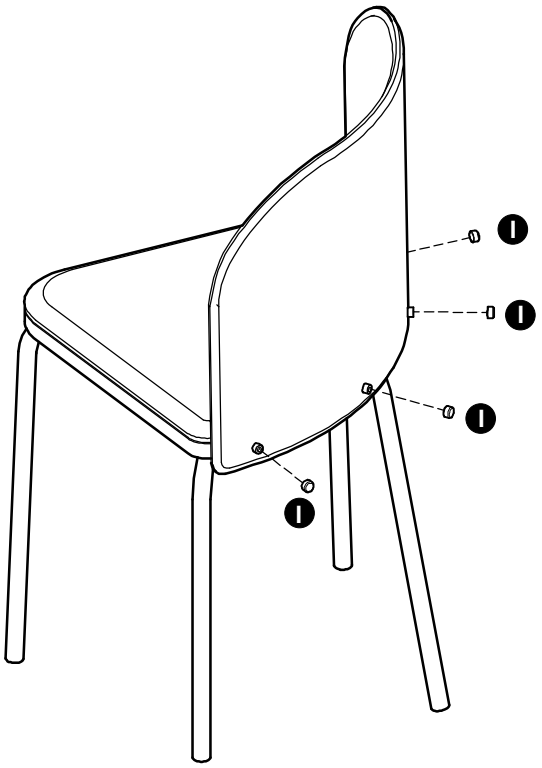

If you need help or have damaged or missing parts, call the **Customer Helpline:**
Argos = 0345 6400800