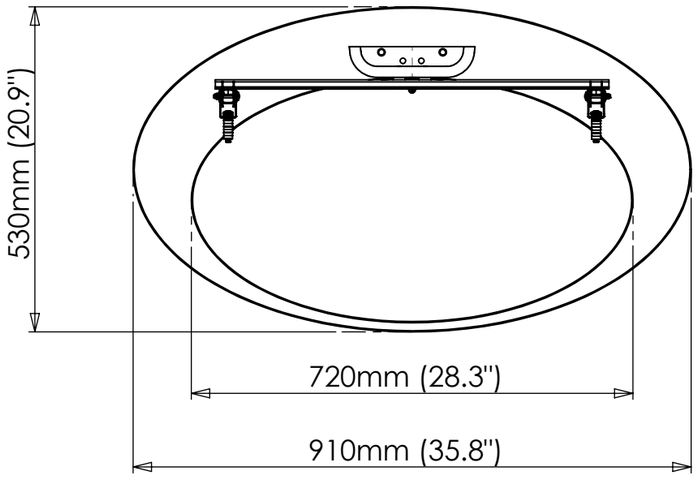

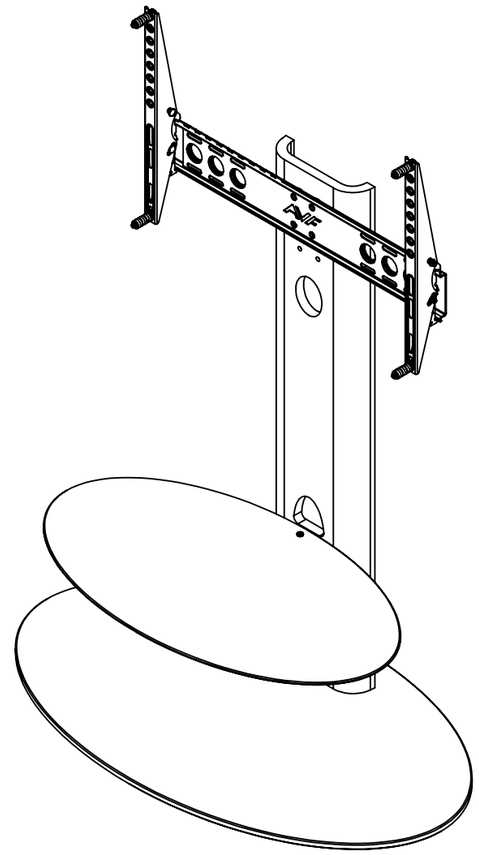

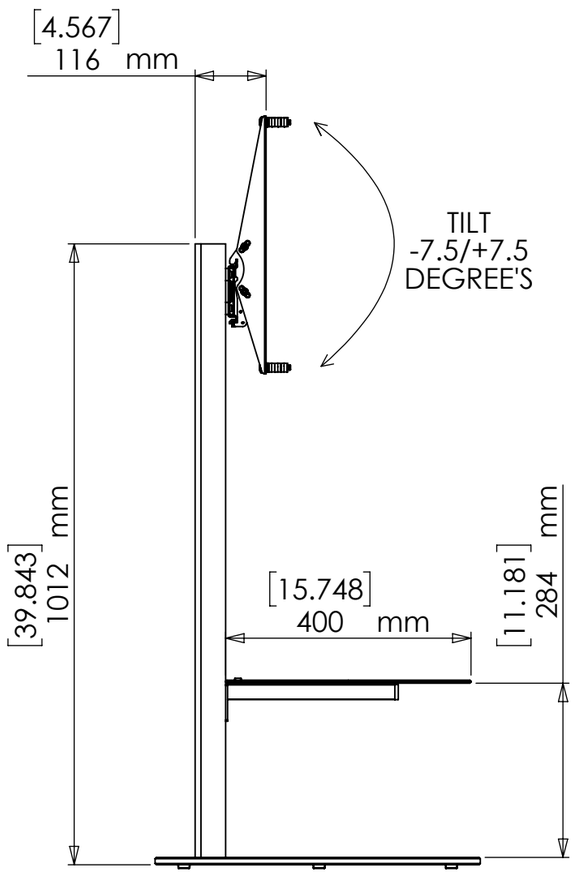

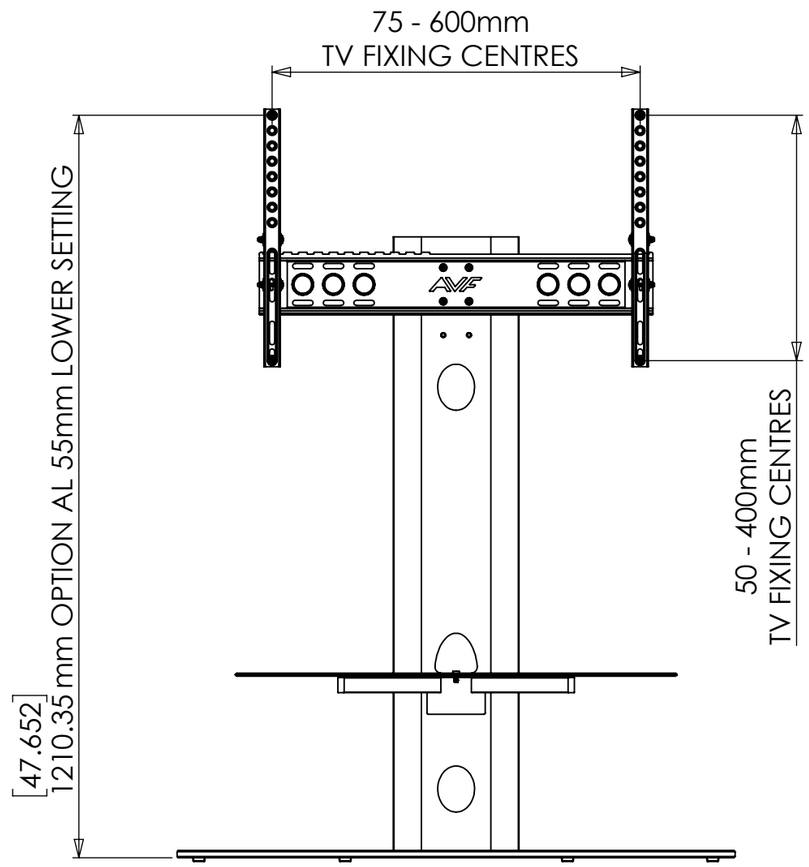

FSL910SAN

PLEASE NOTE PRODUCT DIMENSIONS MAY VARY FROM DRAWING.

The copyright of this drawing is the property of AVF Group Ltd