PRESSURE™
KING
PRO

5 Litre User's Manual

Please visit **www.drewandcole.com** for video instructions and cooking demonstrations.

by

drew&cole®

Index

Topic

Important Safety Information	04
Important safeguards	06
Safety features	09
Box contents	09
Preparing your pressure cooker	10
Control panel features	13
Before using for the first time	14
Cooking program list	16
Browning function	17
Using as a pressure cooker	18
Slow cooker program	24
Fast reheat program	26
Steaming Program	27
Useful tips	27
Care & cleaning	28
Specification	31
Troubleshooting	31

Pressure Mode Correct Lid Placement

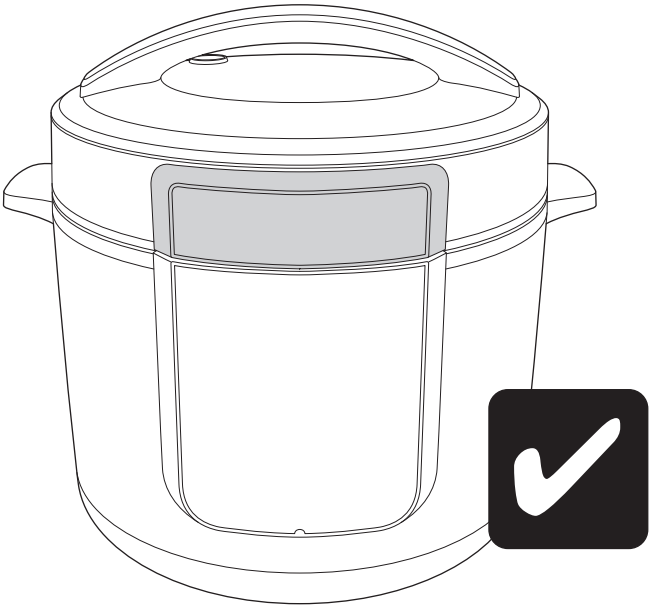

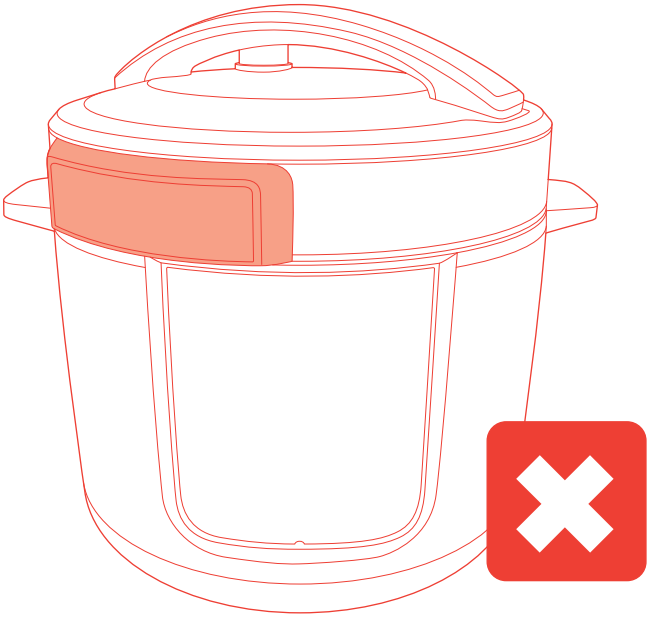

NEVER FORCE THE APPLIANCE OPEN.

MAKE SURE THAT THE INSIDE PRESSURE HAS RETURNED TO NORMAL.

IF YOU EXPERIENCE ANY PROBLEMS WITH THE APPLIANCE, SWITCH OFF AT THE PLUG AND CALL OR CUSTOMER SUPPORT TEAM ON:

0844 800 631

0344 800 0631

EMAIL: customercare@highstreettv.com

Important Safety Information

BEFORE YOU GET STARTED, PLEASE READ THE FOLLOWING IMPORTANT SAFETY INFORMATION, ALONG WITH THE MANUAL ENCLOSED AND KEEP BOTH FOR FUTURE REFERENCE. WARNING YOU ARE WORKING WITH HOT LIQUIDS. YOU MUST READ THIS BEFORE USE.

Before cooking

- **ALWAYS** ensure the INNER POT is in place before cooking.
- Food with skins **(e.g sausages, chicken and fruit) MUST be pierced** before cooking. Not piercing the skin may result in the food expanding and may cause splashing of hot food after the lid is released.
- Do not overfill the inner pot.

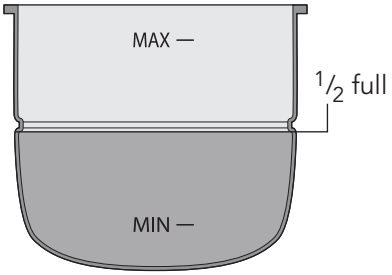

Beans, rice, pasta, pulses and porridge.

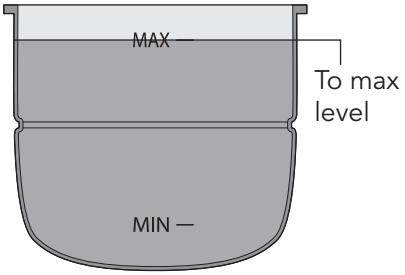

Everything else

- The lid must be closed fully before selecting a cooking function. Gently lower the lid and turn it anti-clockwise until it clicks into place.
- Ensure the pressure release valve is in the closed position (pressure cooking functions only), and check that it sits down correctly to seal the opening.

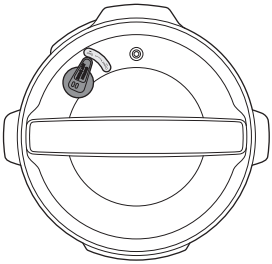

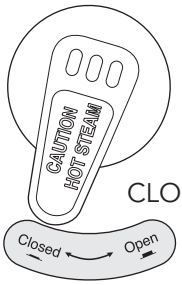

CLOSED

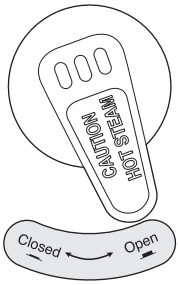

OPEN

Pressure release methods

- When the programme is finished and you wish to commence pressure release press the "Cancel" button to cancel the Keep Warm function.
- When releasing the pressure valve, always use tongs and please wear oven gloves to turn the pressure valve to the open position. This will protect against hot steam. The valve will lift up slightly and steam will release. The lid won't open until the steam has vented and pressure has released.
- When opening the lid food will be hot, please always wear oven gloves and an apron to protect against any splashing of the hot food.

Quick release

Recommended for:

Quick cooking recipes and steaming, including vegetables and seafood.

When the Keep Warm function has been cancelled, move the pressure release valve to the open position and only attempt to open lid when all steam has released and the float valve has dropped.

Leave the pressure cooker to stand for 1 - 2 minutes.

The Lid can now be opened, if the lid does not open, wait a few more minutes and try again. Never try to force the lid off as a locked lid is a sign that the unit still has some pressure.

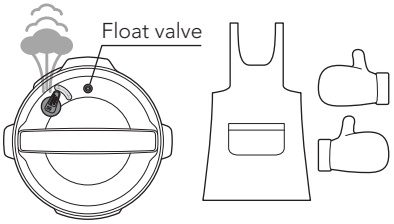

Wait at least 1–2 mins.

Slow release

Recommended for:

Food with skins (e.g sausages, chicken and fruit) and foods with large liquid volume or high starch content (such as porridge, soup, pasta, rice, fruit and grains, and also delicate foods such as meats and potato) can trap air and cause the food to foam and expand which may cause splashing of hot food after the lid is removed.

To avoid any splashing, after you have **cancelled** the **Keep Warm function** leave the pressure release valve in the closed position **and allow pressure to release naturally. This can take 15 minutes or more.** Recipe dependant.. When the float valve has dropped, move the pressure release valve to open to ensure all the pressure is released.

The Lid can now be opened, if the lid does not open, wait a few more minutes and try again. Never try to force the lid off as a locked lid is a sign that the unit still has some pressure.

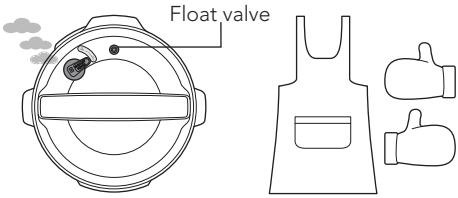

Wait at least 15 mins.

For both methods, give the cooker a few gentle shakes while holding the base unit handles to release any residual steam before opening the lid. There could still be steam held under the food that has not yet broken the surface. Without gentle shaking, this steam could come to the surface even several seconds after the lid has been removed.

NEVER FORCE OPEN THE LID

Important Safeguards

When using electrical appliances, basic safety precautions should always be followed including the following:

- Read and follow all instructions carefully.
- This appliance can be used by children aged from 8 years and above and persons with reduced physical, sensory or mental capabilities or lack of experience and knowledge if they have been given supervision or instruction concerning use of the appliance in a safe way and understand the hazards involved. Children shall not play with the appliance. Cleaning and user maintenance shall not be made by children without supervision.
- Appliances can be used by persons with reduced physical, sensory or mental capabilities or lack of experience and knowledge if they have been given supervision or instruction concerning use of the appliance in a safe way and understand the hazards involved.
- Children shall not play with the appliance.
- Do not touch hot surfaces. Use handles or knobs.
- To protect against electric shock do not immerse or rinse cords or plug in water or other liquid.
- Unplug from outlet when not in use and before cleaning. Allow to cool before putting on or taking off parts.
- Do not operate any appliance with a damaged cord or plug or after the appliance malfunctions or has been damaged in any manner. Return appliance to the nearest authorised service facility for examination, repair or adjustment.
- Do not use any attachments or utensils that were not recommended or supplied by the manufacturer. The use of attachments not recommended for use by the manufacturer may cause serious hazardous situations including personal injury.
- Do not use outdoors.
- Do not let cord hang over edge of table or counter, or touch hot surfaces.
- **Do not place on or near a hot gas or electric burner, or in a heated oven.**
- Extreme caution must be used when moving an appliance containing hot oil or other hot liquids.
- Always attach plug to appliance first, then plug cord into the wall outlet. To disconnect, remove the plug from wall outlet.
- Do not use appliance for anything other than its intended use.
- **This appliance cooks under pressure. Improper use may result in scalding injury. Make certain unit is properly closed before operating. See instructions For Use.**
- **Never fill the unit above MAX line in the Inner Pot. When using foods that expand during cooking such as rice or dried beans, follow the recipe for "pressure cooking" those products, and as a rule of thumb, do not fill the unit above the "halfway" point. Overfilling may cause clogging, allowing excess pressure to develop.**
- **Be Aware that certain foods, such as apple-sauce, cranberries, pearl barley, oatmeal or other cereals, split peas, noodles, macaroni, rhubarb, and spaghetti, can foam, froth, sputter, and clog the pressure release device (steam vent). Recipes using these items must be followed carefully to avoid problems.**
- Always check the pressure release devices for clogs before use
- Do not open the pressure cooker until the unit has cooled and all internal pressure has been released. If the unit is difficult to open, this indicates that the cooker is still pressurised – do not force it open. Any pressure in the cooker can be hazardous. Please read these instructions.
- Do not use this pressure cooker for pressure frying with oil.

Important Safeguards (cont...)

- This appliance has been designed for use with a 3 prong, grounded, 220-240V electrical outlet only. Do not use any other electrical outlet.
- **The pressure cooker generates extreme heat and steam in its operation. All necessary precautions must be taken to avoid fire, burns and other personal injury during its operation.**
- When in operation the pressure cooker requires sufficient air space on all sides including top and bottom. Never operate the unit near any flammable materials such as dish towels, paper towels, curtains, paper plates, etc.
- Always plug the electrical cord directly into the wall outlet. Never use this unit with an extension cord of any kind.
- Anyone who has not fully read and understood all operating and safety instructions contained in this manual is not qualified to operate or clean this appliance.
- If this unit falls or accidentally becomes immersed in water, unplug it from wall outlet immediately. Do not reach into the water!
- Do not operate this appliance on an unstable surface.
- If this appliance begins to malfunction during use, immediately unplug the cord. Do not use or attempt to repair a malfunctioning appliance!
- **NEVER FORCE OPEN the pressure cooker. If you need to open the pressure cooker press the CANCEL button and using tongs or a kitchen tool carefully rotate the pressure valve to the OPEN position to fully release the building pressure inside the cooker. Leave until the unit & contents until they have cooled down fully. Make sure that all the steam has dissipated from the cooker. Carefully turn the handle clockwise to open. Always open the lid away from you to avoid skin contact with any remaining heat or steam.**
- **CAUTION: TO REDUCE RISK OF ELECTRIC SHOCK COOK ONLY IN THE REMOVABLE CONTAINER.** Do not immerse the housing or base in water. Before use, clean the bottom of the Inner Pot and the surface of the heater plate… insert the Inner Pot, turning it slightly clockwise and counter clockwise until you are sure it is sitting correctly on the heater plate. Failure to do so will prevent proper operation and may cause damage to the unit.
- **CAUTION HOT SURFACE. This appliance generates heat and escaping steam during use. Proper precautions must be taken to prevent the risk of personal injury, fires, and damage to property.**
- When in operation, never leave the appliance unattended.
- Be careful also about the risk of scalding from the steam coming out of the appliance when you open the lid. First open the lid very slightly to allow the steam to escape gently.
- If the silicon gasket or inner pot are damaged in any way. **DO NOT USE** and call customer services for a replacement.
- Make sure that the appliance is properly closed before bringing up to pressure (see Instructions for use).
- Do not use the appliance empty, without its inner pot or without liquid inside the inner pot. This could cause serious damage to the appliance.
- After cooking meat which has an outer layer of skin (such as Ox tongue, bacon joints, chicken etc.), which could swell. Due to the effects of pressure, do not pierce the skin after cooking if it appears swollen: you could get burnt. Pierce it BEFORE cooking.
- When cooking food with a thick texture (chick peas, rhubarb, compotes, etc.), shake

the appliance slightly before opening it to ensure that the food or cooking juices do not spurt out.

- Please be aware that quickly releasing the pressure after cooking is not suitable for food with a large liquid volume or high starch content (e.g. porridge, congee, sticky liquids, soup etc.). Food content may splatter out from the pressure release valve. Use natural release method instead - allow the cooker to cool down naturally until the float valve drops down. This may take between 15 and 20 minutes.

This appliance is intended to be used in household and similar applications such as:

– staff kitchen areas in shops, offices and other working environments;

– farm houses;

– by clients in hotels, motels and other residential type environments;

– bed and breakfast type environments.

- The heating element surface is subject to residual heat after use, please pay attention to it.
- **THE LID MUST BE CLOSED FULLY BEFORE SELECTING A PRESSURE FUNCTION.**
- **LET THE FOOD SETTLE FOR AT LEAST TWO MINUTES AFTER PRESSURE RELEASE FLOAT VALVE HAS DROPPED.**
- **AVOID SPILLAGE ON THE CONNECTOR.**
- **ALWAYS SHAKE THE UNIT SLIGHTLY AFTER THE FLOAT VALVE HAS DROPPED BEFORE OPENING THE LID.**

Short Cord Instructions

- A short power-supply cord is provided to reduce the risk resulting from becoming entangled in or tripping over a longer cord. Do not use an extension cord with this product.

Electric Power

- If the electrical circuit is overloaded with other appliances, your appliance may not operate properly. It should be operated on a dedicated electrical circuit

NOTE: This product must be grounded. If it should malfunction or break down, grounding provides a path of least resistance for electric current to reduce the risk of electric shock. This product is equipped with a cord having an equipment grounding conductor and a grounding plug. The plug must be plugged into an appropriate outlet that is properly installed and grounded in accordance with all local codes and ordnances.

Safety Features

- The pressure release valve will automatically exhaust and limit the pressure.
- If the pressure release valve fails the lid will release the pressure. In this case the pressure release valve is faulty and needs to be replaced.
- The cooker features a safety temperature cut out if the temperature rises too much, it will cut off and only start heating again when the temperature has returned to the normal temperature.
- If this function fails the pressure cooker will cut off, it will not re-start and needs to be replaced.
- The lid cannot be opened if the pressure inside is high.
- The pressure cooker mode will only function when the lid is fully closed.

Box Contents

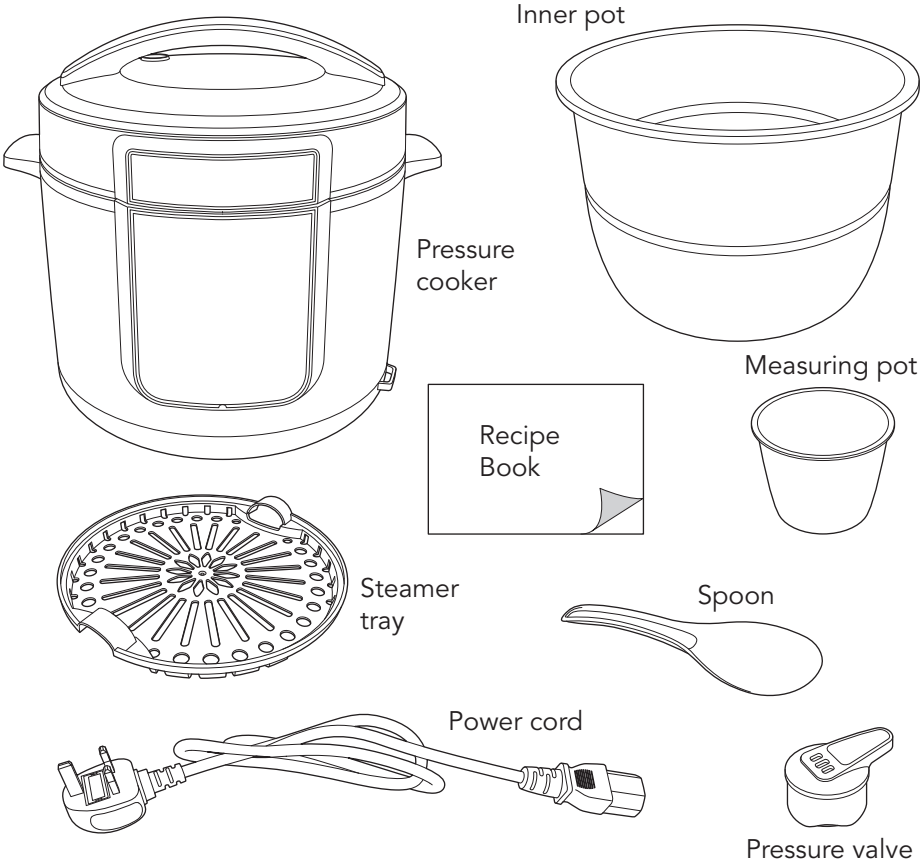

Preparing Your Pressure Cooker

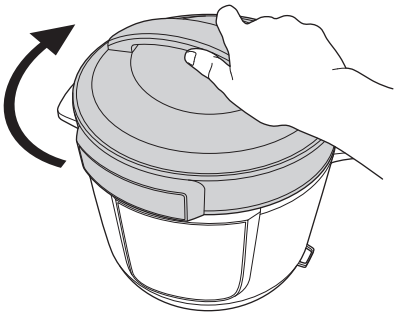

To open the lid turn the handle on the top clockwise as far as it will go.

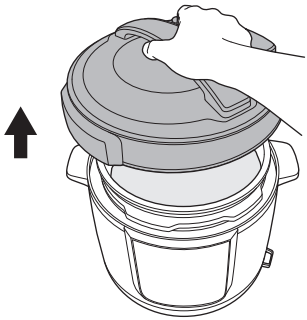

Lift the lid off the pressure cooker.

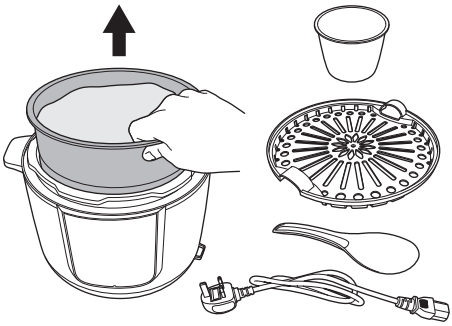

Remove the inner pot.

Remove all of the items from inside your inner pot.

Important: Before using your pressure cooker for the first time you will have to wash the Inner pot, steamer tray, spatula & measuring pot in warm soapy water, rinse then dry thoroughly. Never use metal scourers to clean the utensils as this will damage the surfaces.

Preparing Your Pressure Cooker (cont...)

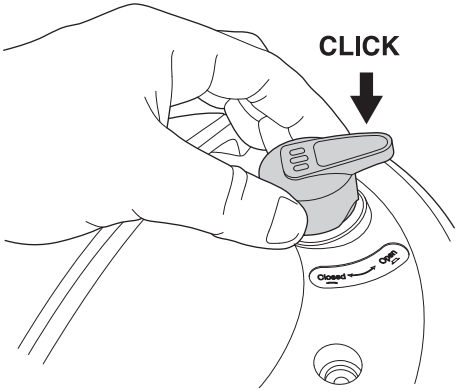

Lower the lid and slot the pressure valve into the large recess on the top of the pressure cookers lid.

Push the pressure valve down until it locks in place with a click.

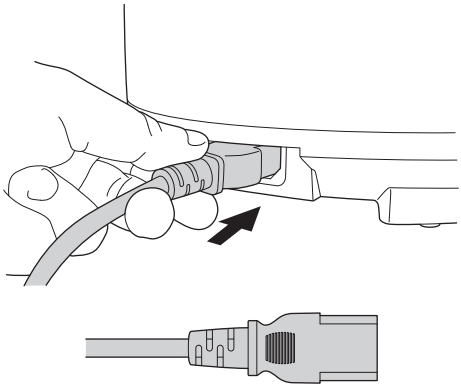

Slot the end of the power cord into the socket on the rear of the pressure cooker as shown in the diagram.

Plug the other end of the power cable into a power socket and turn on the power at the socket if required.

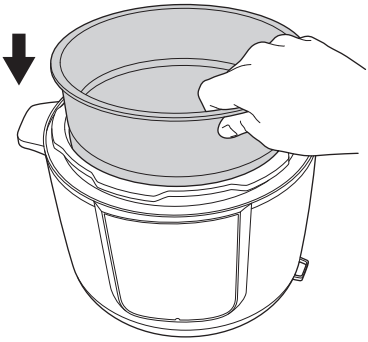

Place the inner pot into the outer body of the pressure cooker.

Your pressure cooker is now ready for use.

Preparing Your Pressure Cooker (cont...)

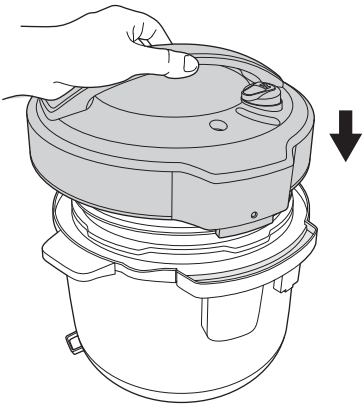

Place the lid back onto the pressure cooker.

Ensure the tab on the back of the lid slots into the channel on the back of the pressure cooker.

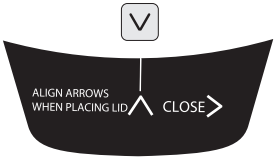

PRESSURE MODE WILL ONLY OPERATE WHEN THE LID IS CLOSED CORRECTLY

Align the arrow on the lid with the and the arrow on the left handle of the pressure cooker.

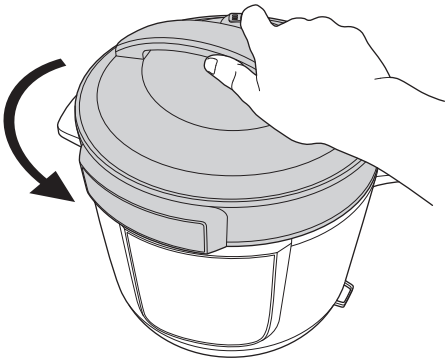

Turn the lid anti-clockwise until it locks with a click.

Preparing Your Pressure Cooker (cont...)

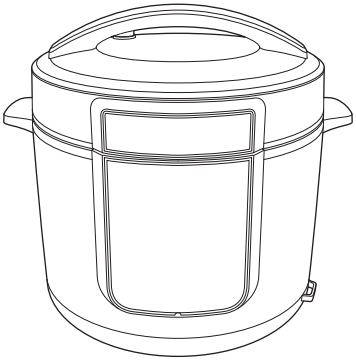

Your pressure cooker is now ready for pressure cleaning, see over page.

Control Panel Features

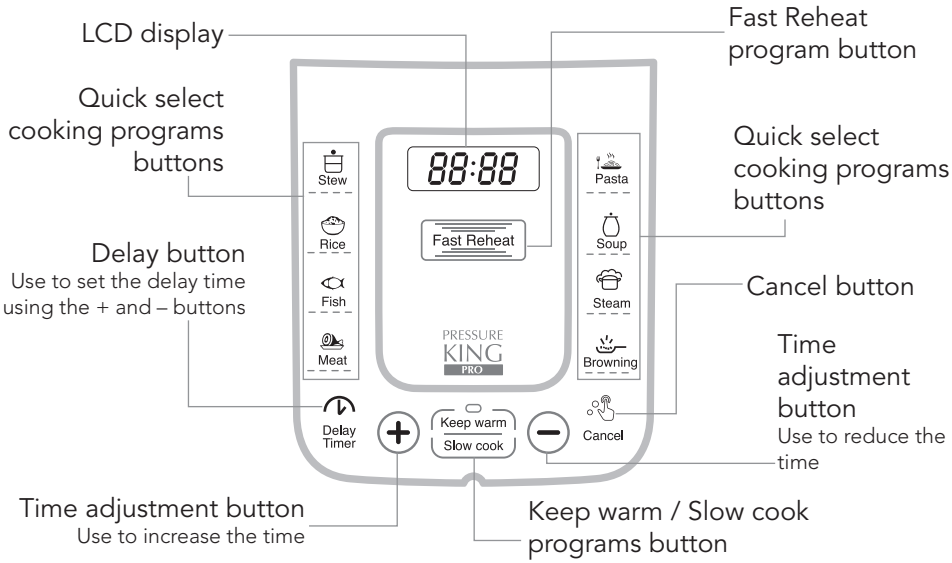

Before Using For The First Time

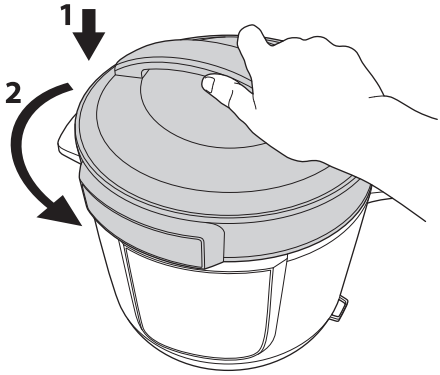

Remove the lid and pour 2 litres of water into the inner pot.

Refit the lid and lock by turning anti-clockwise.

Turn the pressure cooker on at the socket if required.

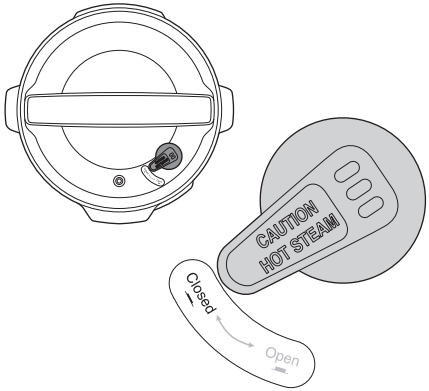

Turn the pressure release valve to the CLOSED position.

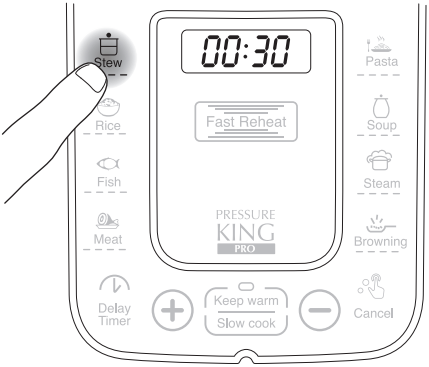

Select the stew function by pressing the illuminated **STEW** button on the front of your pressure cooker.

The digits on the display will spin until the pressure cooker is at the correct temperature and pressure and the float valve will rise.

Now the countdown will begin.

Before Using For The First Time (cont...)

Once the program has finished, your pressure cooker will 'Beep'.

Press the **CANCEL** button to cancel the keep warm function.

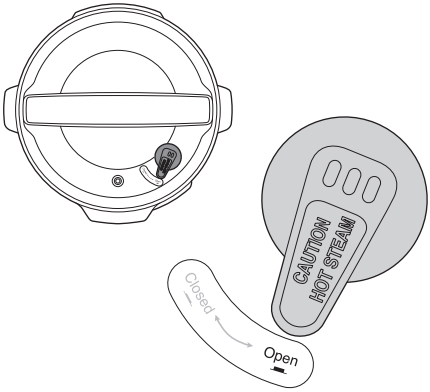

Releasing the steam

You will now have to open the Steam Release valve, to do this cover your hand with an oven glove or similar or better use a pair of tongs to turn the valve to one of the release settings.

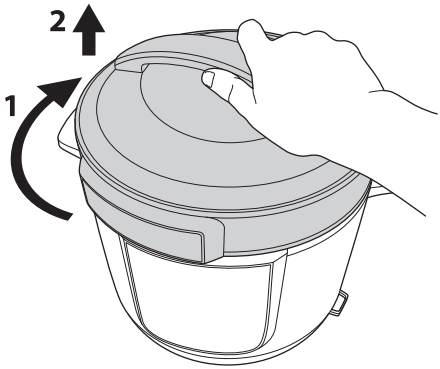

Allow your pressure cooker to cool down for 15 minutes.

Open the lid by turning it clockwise and then lift off the pressure cooker.

Remove and empty the inner pan using oven gloves or a heat proof cloth.

Your pressure cookers inner valves and lid are now thoroughly cleaned.

Cooking Program List

Program	Default time	Adjust time	Temperature °C	Pressure
Rice	12 minutes	1 -20 minutes	160°C	50 Kpa
Pasta	10 minutes	1 -15 minutes	155°C	50 Kpa
Soup	25 minutes	1 -40 minutes	150°C	50 Kpa
Stew	30 minutes	1 -120 minutes	150°C	50 Kpa
Meat	13 minutes	1 -60 minutes	140°C	50 Kpa
Fish	8 minutes	1 - 15 minutes	150°C	50 Kpa
Steam	3 minute	1 - 25 minutes	150°C	50 Kpa
Slow cook	24 hours	By 30 minutes	100°C	N/A
Fast reheat	1 minutes	N/A	100°C	50 Kpa
Browning	3 minutes	N/A	upto 150°C	N/A

Browning function

Important: Never fit the lid when using the browning function.

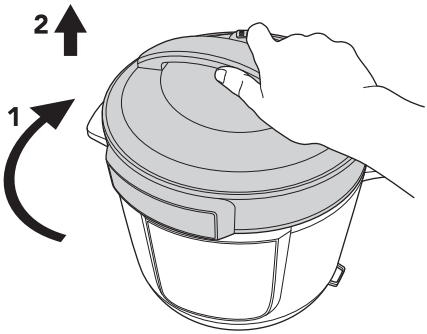

Turn the lid clockwise and remove.

Plug your pressure cooker in and turn the power on at the socket if required.

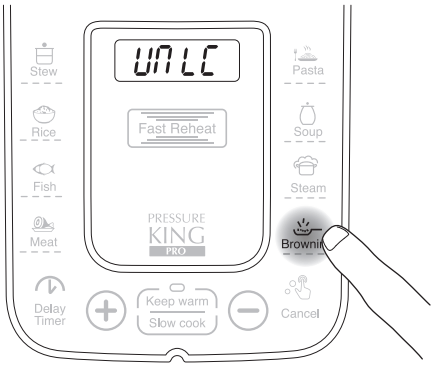

Place a small amount of oil (check recipe) in the bottom of the inner pot.

Press the **BROWNING** button.

The LED display will show 'UNLC', this will be followed by the 3 minute count down.

Place the ingredients into the inner pot.

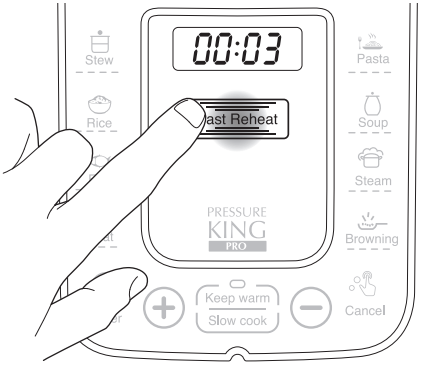

Once the browning has been completed press the **CANCEL** button.

If you require more time to brown your ingredients, press the **BROWNING** button again for another 3 minutes.

Using as a Pressure Cooker

Important: Ensure inside of the pressure cooker and the inner pot are clean and free from any food debris before starting.

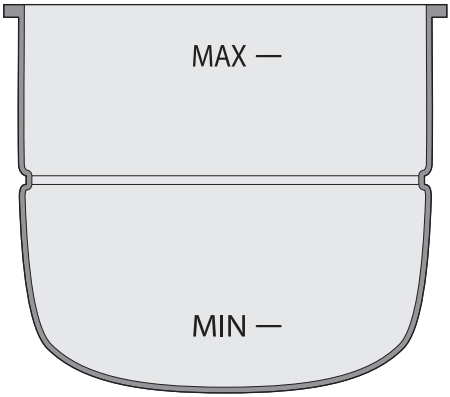

Filling the inner pot

NEVER place food or liquid directly into the pressure cooker. Always use the inner pot to cook food in.

Remove the inner pot from your pressure cooker and fill with the ingredients required for the recipe.

Place the liquid in the inner pot.

Important: The liquid and ingredients should be between the MAX and MIN marks on the inside of the inner pot.

Important: When cooking ingredients that expand during cooking, we recommend that you only fill the inner pot halfway between the MAX and MIN marks.

CAUTION: When using as a pressure cooker, always use liquid in the inner pot. The liquid should always come up to the MIN mark.

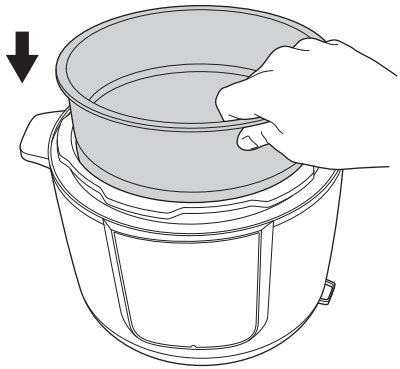

Place the inner pot into the pressure cooker.

Take care not to spill any liquid when placing the pot in the pressure cooker.

If you do clean up with a damp cloth

Using as a Pressure Cooker (cont...)

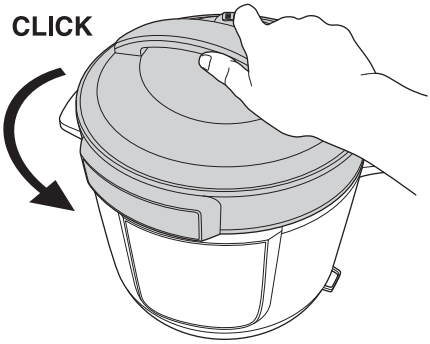

Fit the lid and close by turning it anti-clockwise until it locks with a click.

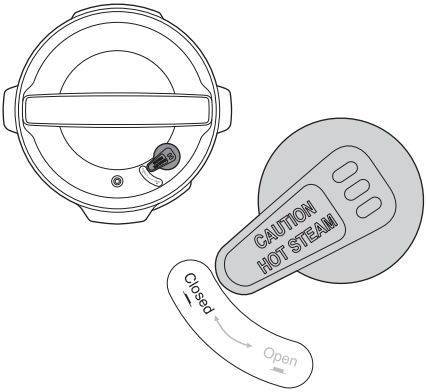

Pressure release valve

To cook under pressure you **MUST** turn the pressure release valve to the closed position.

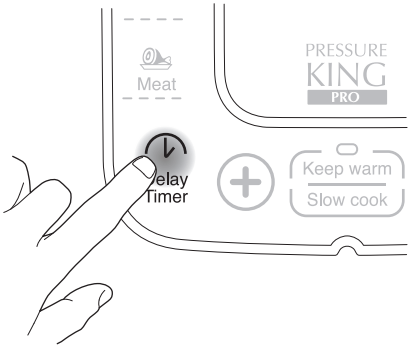

Setting the delay timer

If you want your cooking to start later in the day press the **DELAY TIMER** button.

Use the **+** and **–** buttons to adjust the delay timer in 10 minute stages.

Now press the desired program button and the countdown timer will begin.

The cooking can be delayed for a maximum of 24 hours.

Using as a Pressure Cooker (cont...)

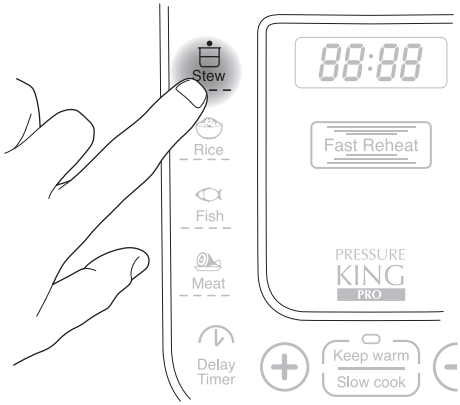

Selecting a cooking program

Select the cooking program you want to use. If using a recipe, check the recommended setting or check the cooking program list shown on page 14.

Note: you cannot pick SLOW COOK, FAST REHEAT or BROWNING for pressure cooking.

Starting the cooking program

Once you have pressed the cooking program button it will start the delay timer or start cooking your meal.

The '00' on the display will begin to rotate showing that the pressure cooker is heating up and creating the correct amount of pressure to cook your meal and the float valve will have popped up.

Once the pressure is at its optimum level, the pressure cooker will start the cooking process and the countdown will be shown on the display.

Using as a Pressure Cooker (cont...)

When the timer has finished, your pressure cooker will sound a 'BEEP' and END will be shown on the display.

Your pressure cooker will now start the KEEP WARM function, this function will run for a maximum of 24 hours.

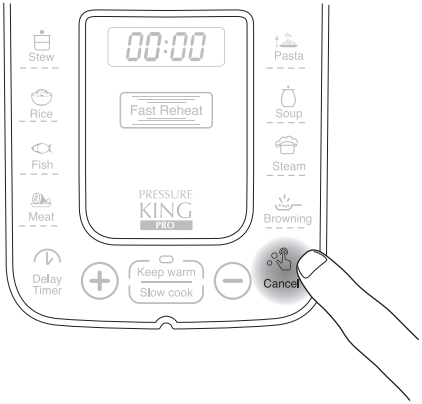

You can stop the keep warm function by pressing the **CANCEL** button.

Using as a Pressure Cooker (cont...)

CAUTION: Before attempting to open the pressure cookers lid you will need to release the steam. Follow the instructions below and take great care as steam can give you serious burns.

SEE BELOW FOR PRESSURE RELEASE METHOD TO BE USED.

Pressure release methods

- When the programme is finished and you wish to commence pressure release press the "Cancel" button to cancel the Keep Warm function.
- When releasing the pressure valve, always use tongs and please wear oven gloves to turn the pressure valve to the open position. This will protect against hot steam. The valve will lift up slightly and steam will release. The lid won't open until the steam has vented and pressure has released.
- When opening the lid food will be hot, please always wear oven gloves and an apron to protect against any splashing of the hot food.

Quick release

Recommended for:

Quick cooking recipes and steaming, including vegetables and seafood.

When the Keep Warm function has been cancelled, move the pressure release valve to the open position and only attempt to open lid when all steam has released and the float valve has dropped.

Leave the pressure cooker to stand for 1 - 2 minutes.

The Lid can now be opened, if the lid does not open, wait a few more minutes and try again. Never try to force the lid off as a locked lid is a sign that the unit still has some pressure.

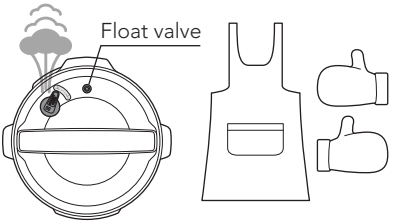

Wait at least 1–2 mins.

Slow release

Recommended for:

Food with skins (e.g sausages, chicken and fruit) and foods with large liquid volume or high starch content (such as porridge, soup, pasta, rice, fruit and grains, and also delicate foods such as meats and potato) can trap air and cause the food to foam and expand which may cause splashing of hot food after the lid is removed.

To avoid any splashing, after you have **cancelled** the **Keep Warm function** leave the pressure release valve in the closed position **and allow pressure to release naturally. This can take 15 minutes or more.** Recipe dependant.. When the float valve has dropped, move the pressure release valve to open to ensure all the pressure is released.

The Lid can now be opened, if the lid does not open, wait a few more minutes and try again. Never try to force the lid off as a locked lid is a sign that the unit still has some pressure.

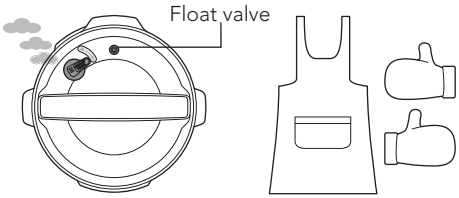

Wait at least 15 mins.

Using as a Pressure Cooker (cont...)

For both methods, give the cooker a few gentle shakes while holding the base unit handles to release any residual steam before opening the lid. There could still be steam held under the food that has not yet broken the surface. Without gentle shaking, this steam could come to the surface even several seconds after the lid has been removed.

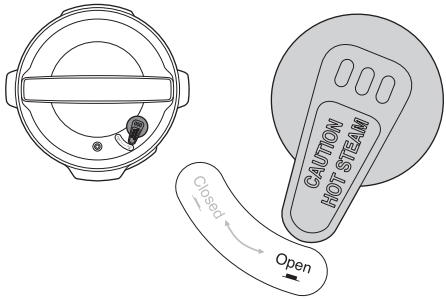

Releasing the steam

You will now have to open the Steam Release valve, to do this cover your hand with an oven glove or similar or better use a pair of tongs to turn the valve to open position.

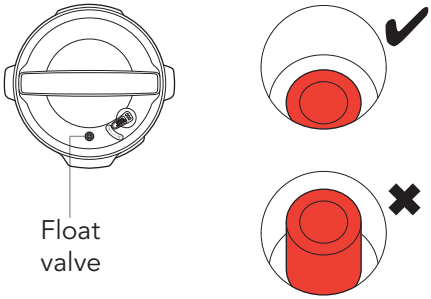

After steam has stopped coming out of the Steam release valve, check that the Float valve has dropped before opening the pressure cookers lid.

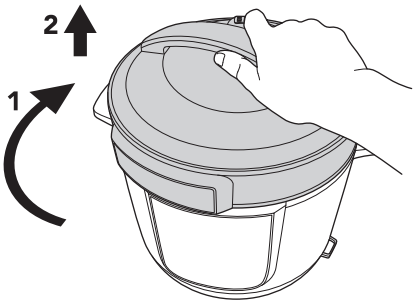

You can now open the pressure cookers lid by turning it clockwise and lifting off. Remove the inner pot using a heat proof cloth or oven glove. After using your pressure cooker please clean it by following the Care & Maintenance section of these instructions. **NEVER TOUCH THE FLOAT VALVE DURING COOKING OR IMMEDIATELY POST COOKING.**

CAUTION: After cooking the lid, inner casing, inner pot and food will be very hot and should be handled with caution.

Slow Cooker Program

Important: The slow cooker program does not use steam pressure to cook the ingredients so the stem release valve **must be set in the open position.**

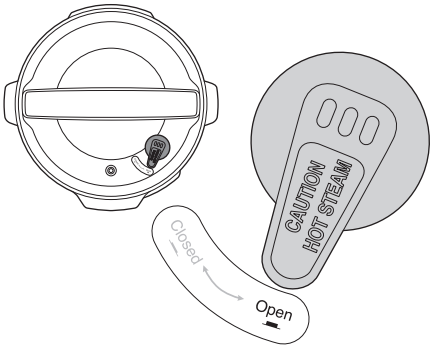

Pressure release valve

You **MUST** turn the pressure release valve to the open position.

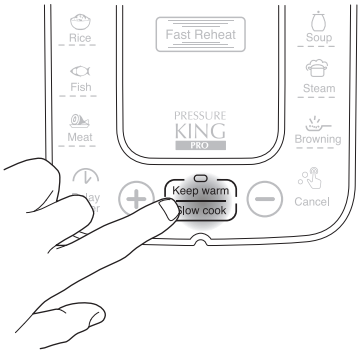

Selecting the program

Place all of your ingredients into the inner pot.

Press the **KEEP WARM / SLOW COOK** button on the bottom of the control panel, 'SLO' will be shown on the display and will begin the cooking cycle. The cooking cycle will last 24 hours. You can change the length of the cooking cycle by following the instructions below.

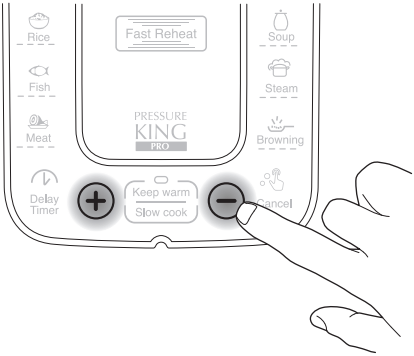

Adjusting the cooking time

Press the **+** and **–** to adjust the time in 30 minute intervals.

Slow Cooker Program (cont...)

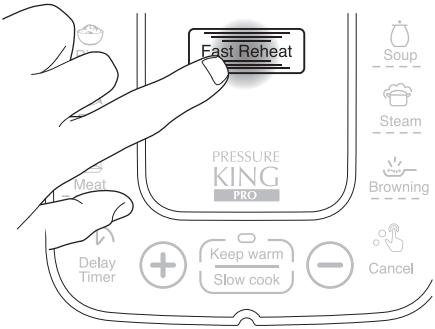

When the cooking program has finished, your pressure cooker will sound a 'BEEP'.

Your pressure cooker will now start the KEEP WARM function, this function will run for a maximum of 24 hours.

You can stop the keep warm function by pressing the **CANCEL** button.

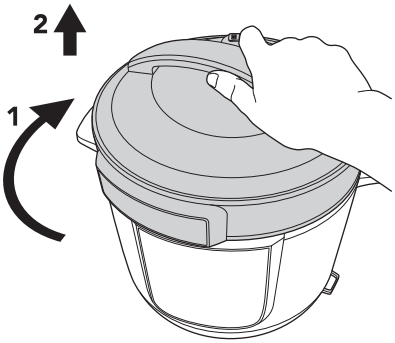

Allow your pressure cooker to cool for a few minutes then undo the lid by rotating it clockwise and lift off.

Remove the inner pot using oven gloves or a heat proof cloth

Serve your food using nonmetallic utensils.

CAUTION: After cooking the lid, inner casing, inner pot and food will be very hot and should be handled with caution.

Fast Reheat Program

Important: The fast reheat program does not use steam pressure to cook the ingredients so the stem release valve must be set in the open position.

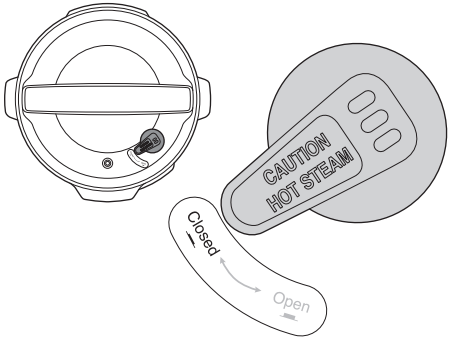

Pressure release valve

You **MUST** turn the pressure release valve to the closed position to use the Fast Reheat program.

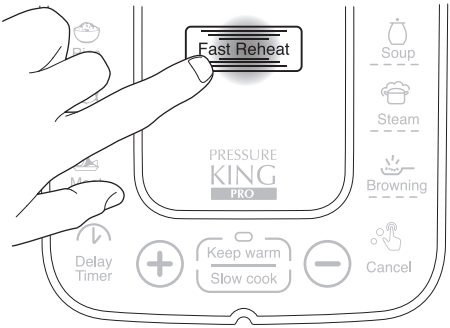

Place the food to be reheated into the inner pot, then close and lock the lid.

Press the **FAST REHEAT** button to start the reheating process.

The display will flash and the '0000' digits on the display will begin to rotate for 1 minute.

When the program has finished you will hear a 'BEEP' twice and 'END' will be shown on the display.

Press the **CANCEL** button and open the pressure release valve.

Repeat as necessary.

Steaming Program

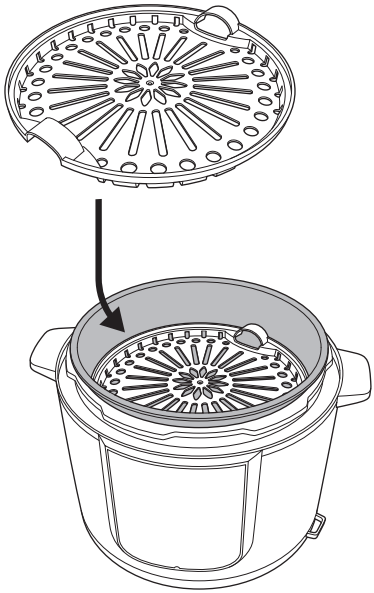

If you want to use your pressure cooker as a steamer you will have to place the steamer tray into the inner pot.

Place water up to at least the MIN line on the inner pot.

Slot the steamer tray into the inner pot so that it rests on the ridge half way down the pot.

You can now place the food onto the steamer tray and close the lid.

Ensure the pressure release valve is in the **OPEN** position and close the lid.

Press the **STEAM** button on the front of your pressure cooker to begin the steaming process.

Press the **CANCEL** button to stop the steaming process.

Useful Tips

- To cancel any function simply press the **CANCEL** button on the front of the pressure cooker.
- When cooking fish or vegetables, to speed up the cooking time add hot water to the inner pot. **CAUTION: HOT WATER CAN SCALD.**
- If the lid is hard to replace after use, either allow the lid, inner pot & outer case cool down to room temperature or hold in place and push down for a few seconds with the pressure release valve open. This will release any pressure and the lid be easier to close.
- When connecting to a power socket, the LED display shows '0000', this shows the unit is in stand by mode.
- All food can be cooked from frozen but adjust the time accordingly.
- **WARNING: ALWAYS SHAKE THE CONTENTS OF THE PRESSURE COOKER A FEW TIMES BEFORE OPENING THE LID TO RELEASE ANY TRAPPED STEAM.**
- **TO AVOID THE RISK OF SCALDING, OPEN THE LID VERY SLIGHTLY TO ALLOW STEAM TO ESCAPE GENTLY.**
- **NEVER FORCE THE LID OPEN.**

Care & Cleaning

Important: After every time you use your pressure cooker you must clean any residue food or moisture from all components.

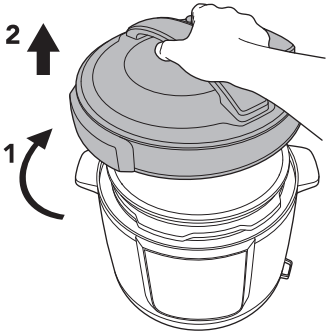

Removing the lid: Before cleaning your pressure cooker, you will have to remove the lid.

Rotate the lid anti-clockwise as far as it will go (**1**).

Lift the lid upwards and off the pressure cooker (**2**).

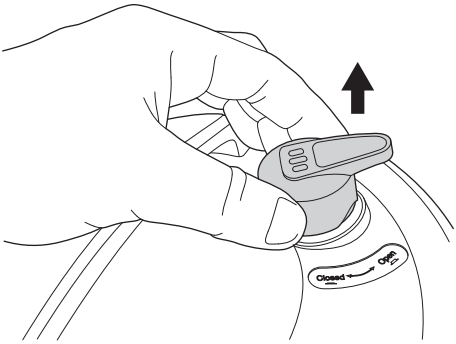

Removing the pressure release valve: Grip the sides of the pressure release valve and pull upwards until it comes off the lid. Use a pin to remove any blockages in the valve.

Always ensure there is no pressure in the cooker before removing.

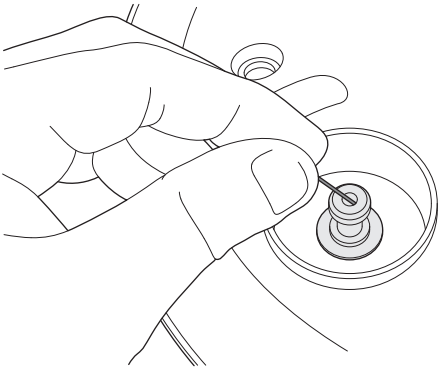

Use a pin to remove any blockages inside or around the valve.

Replace pressure release valve by pushing back into the recess.

Pushdown until it locks in place.

Care & Cleaning (cont...)

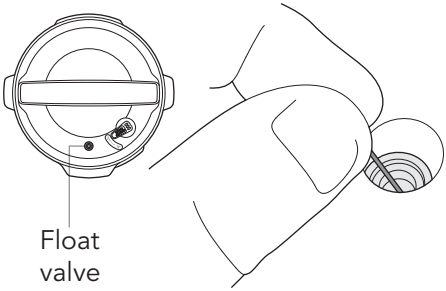

Cleaning the float valve: Clean the float valve using a pin to ensure there is no debris trapped inside or around it.

Check the valve can be raised and will drop back down without sticking.

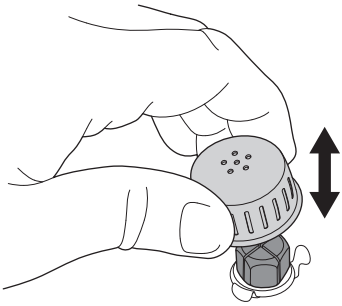

Cleaning the thimble cover and valve: The thimble cover is on the inside of the lid and is only visible when the inner lid is removed. Pull the thimble cover off the valve
Use a pin or brush to remove any blockages inside or around the valve and cover. Replace thimble cover by pushing back over the valve. Pushdown until it locks in place.

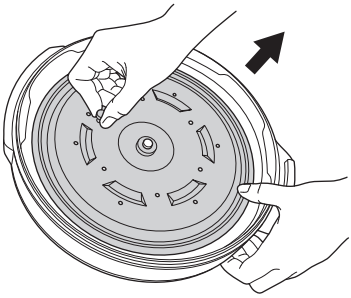

Removing the inner lid: Grip the metal peg on the side of the inner lid and pull outwards.

Clean the inner lid in warm soapy water.

Clean the lid with warm soapy water.

Never use abrasive cleaning agents.

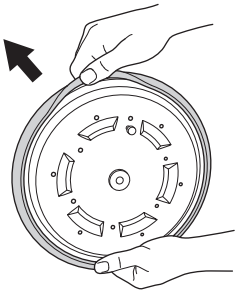

Removing the gasket: Pull the rubber gasket from the sides of the inner lid.

Wash the gasket in warm soapy water.

Refit the gasket around the edge of the inner lid.

Slot the rubber ring back over the post in the middle of the inner lid.

Care & Cleaning (cont...)

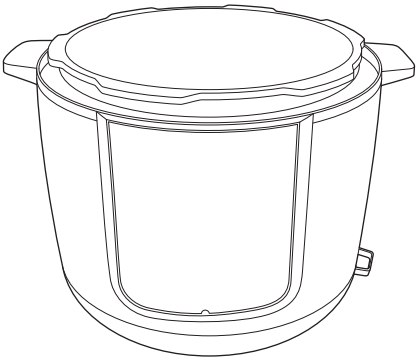

Cleaning the pressure cooker case: Never immerse the outer case in water or any liquid.

Wipe the outer case with a damp cloth then dry thoroughly with a soft dry cloth. Never use abrasive cleaning agents.

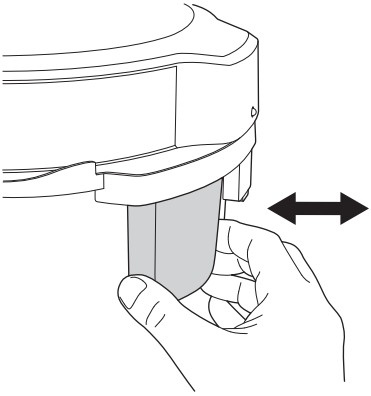

Condensation cup: On the back of the steamer under the hinge you will find the condensation cup.

Pull the condensation cup outwards off the mounting under the hinge.

Wash the cup out with warm soapy water then dry with a soft cloth.

Slot the condensation cup back onto the underside of the hinge.

- Ensure that the float valve on the lid of the pressure cooker is not blocked and can move up and down freely, wipe clean if necessary.
- The inner pot and lid are fully immersible in water for cleaning. Rinse the inner pot and lid under hot running water, using only a mild detergent and a soft cloth or sponge.
- Do not use abrasive powders, bicarbonate of soda or bleach. Never use scouring pads.
- Wipe the base unit with a soft damp cloth, making sure oily food residue is removed.
- DO NOT IMMERSE THE BASE IN WATER OR ANY OTHER LIQUID.

Specification

Power supply	220 ~ 240 V ⎓ 50 Hz
Power	900 W
Net Weight	5 Kgs
Dimensions	316mm x 318mm x 340mm

Troubleshooting

Lid does not close properly.	Check that the inner lid and gasket seal are correctly positioned.
Lid is difficult to remove.	The float valve has not dropped. Ensure the pressure has dropped to normal. NEVER FORCE THE LID OPEN.
Steam is released under the lid during cooking.	Ensure the gasket seal is fitted correctly and not worn out. Ensure all food residue is removed from the gasket.
The float valve does not rise.	There is not enough food or liquid in the inner pot.
Display shows E1, E2, E3 or E4.	**This is a system error** - Unplug and allow your pressure cooker to cool down if applicable then close the lid. If the problem persists after plugging your pressure cooker back in, the appliance has developed a fault and needs replacing. Please call Customer Services on: **0344 800 0631** / **0412 132 998** (Irish customers) for further advice or email us at: customercare@highstreettv.com

drew&cole®

SWITCHED ON LIVING

Distributed by: High Street TV,
PO Box 724, Altrincham, WA15 5BJ
www.highstreettv.com

Model number: SC-40SA
V1-11/18