White Folding Table With Storage

Assembly Instructions - Please keep for future reference

473/9834

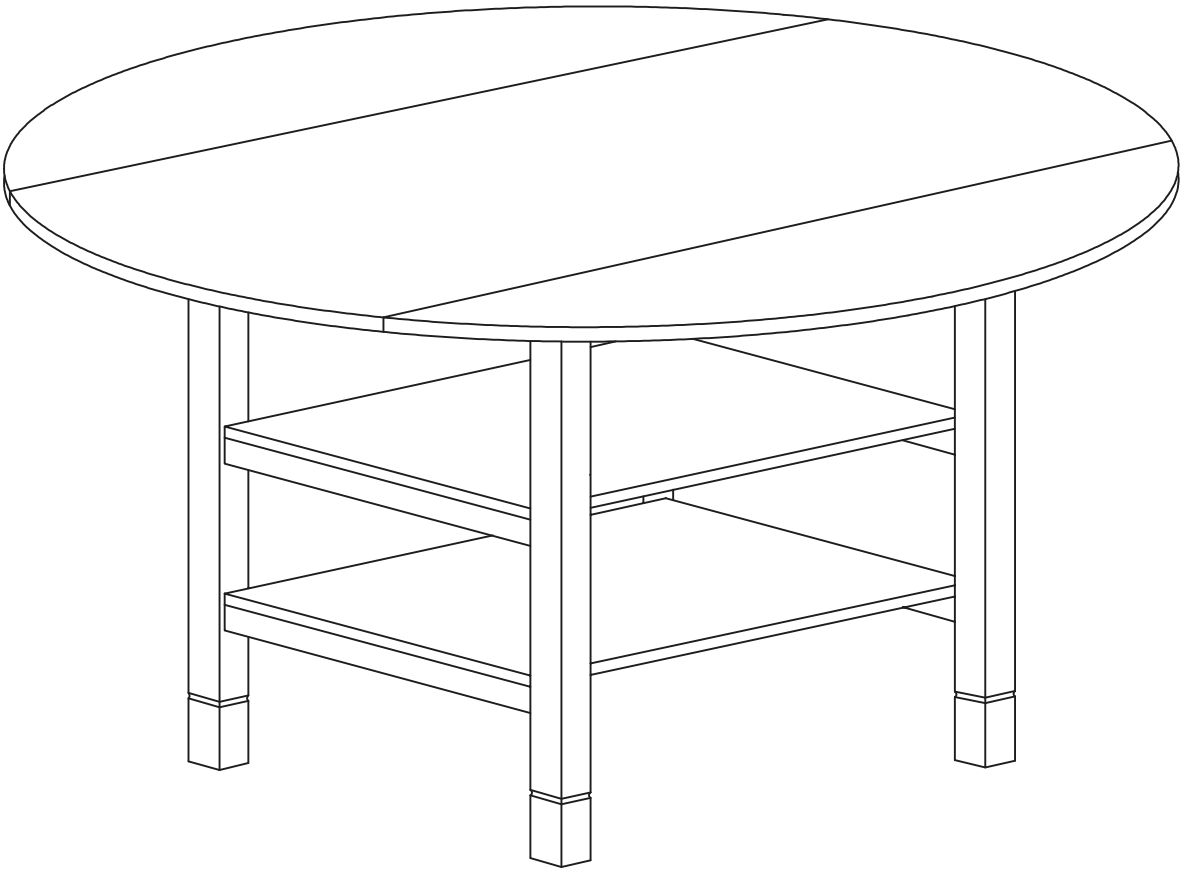

Dimensions
Width - 120cm
Depth - 120cm
Height - 75cm

Important - Please read these instructions fully before starting assembly

If you need help or have damaged or missing parts, call the **Customer Helpline: 0345 640 0800**

Issue 2 - 14/12/15

Safety and Care Advice

Important - Please read these instructions fully before starting assembly

- Check you have all the components and tools listed on page 2 and 3.
- Remove all fittings from the plastic bags and separate them into their groups.
- Keep children and animals away from the work area, small parts could choke if swallowed.
- Make sure you have enough space to layout the parts before starting.
- During assembly do not stand or put weight on the product, this could cause damage.
- Assemble the item as close to its final position (in the same room) as possible.
- Assemble on a soft level surface to avoid damaging the unit or your floor.
- Parts of the assembly will be easier with 2 people.

- To reduce the likelihood of damaging your product please ensure that your power drill is set on a low torque setting.

Care and maintenance

- Only clean using a damp cloth and mild detergent, do no use bleach or abrasive cleaners.
- From time to time check that there are no loose screws on this unit.
- This produt should not be discarded with household waste. Take to your local authority waste disposal centre.

Handy Hints

- Assemble all parts and bolts loosely during assembly, only once the product is complete should you fully tighten the bolts
- Regularly check and ensure that all bolts and fittings are tightened properly.

Note: if required the next page can be cut out and used as reference throughout the assembly. Keep this page with these instructions for future reference.

Components - Panels

If you have damaged or missing components,
call the Customer Helpline: 0345 640 0800

Please check you have all the panels listed below

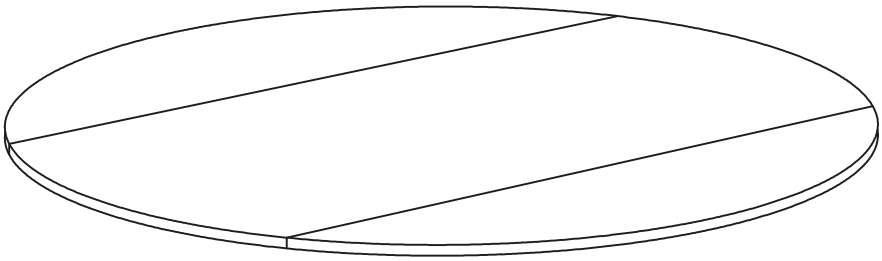

1 Table Top x 1
(120 x 120)cm

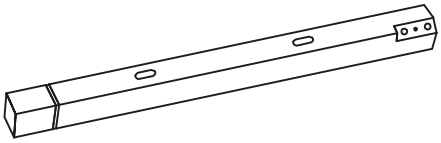

2 Right Table Leg x 2
(73 x 5)cm

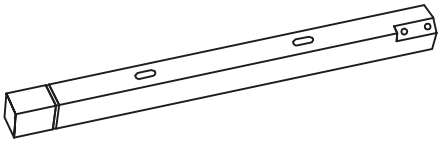

3 Left Table Leg x 2
(73 x 5)cm

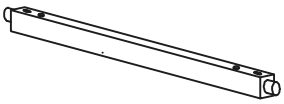

4 Side Support Rail x 4
(40 x 4.4)cm

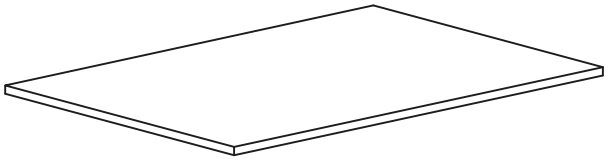

5 Shelf Panel x 2
(69 x 39.6)cm

Components - Fittings

If you have damaged or missing components, **call the Customer Helpline: 03456 400800**

Please check you have all the fittings listed below

Note: The quantities below are the correct amount to complete the assembly for one table. In some cases more fittings may be supplied than are required.

A 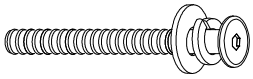 60mm Bolt + Spring Washer + Flat Washer x 8	**B** Allen Key x 1	**C** 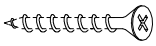 32mm Screw x 16
D 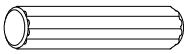 30mm Wood Dowel x 8		

Tools required

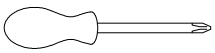
Phillips screwdriver (medium & large)

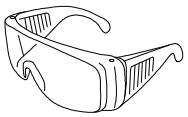
Eye protection (when using a hammer or glue)

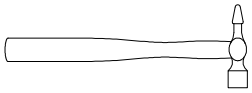
Small hammer

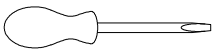
Flatblade screwdriver (medium)

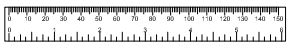
Ruler/tape measure

Ruler - Use this ruler to help correctly identify the screws

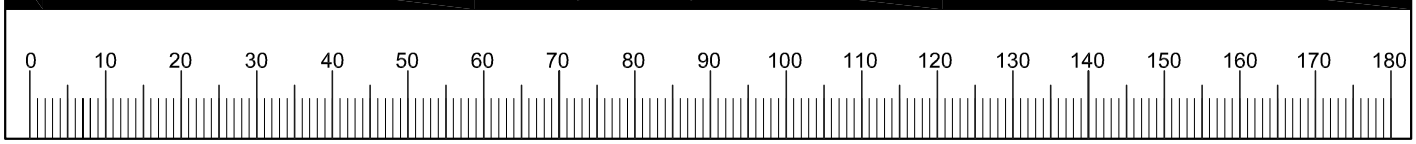

Assembly Instructions

Step 1

Note : It would be useful to ask someone to help you at this stage.

Fix Wood Dowel D into Shelf Panel 5 and Side Support Rail 4, Fix screw C into Side Support Rail 4 using Screwdriver.

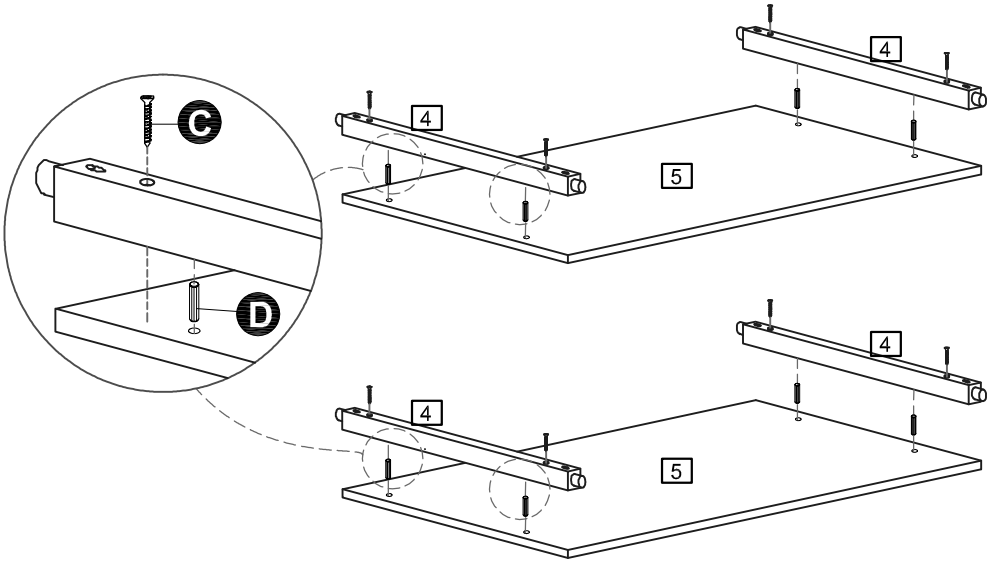

Step 2

Before assembly at this step please make sure the table leg is right position. 2 has small hole for identification.

Fix the Table Leg 2 and Table Leg 3 onto Table Top 1 using bolt A + Spring washer + Flat washer and Allen Key B .

Note : Do not fully tighten the bolt at this stage.

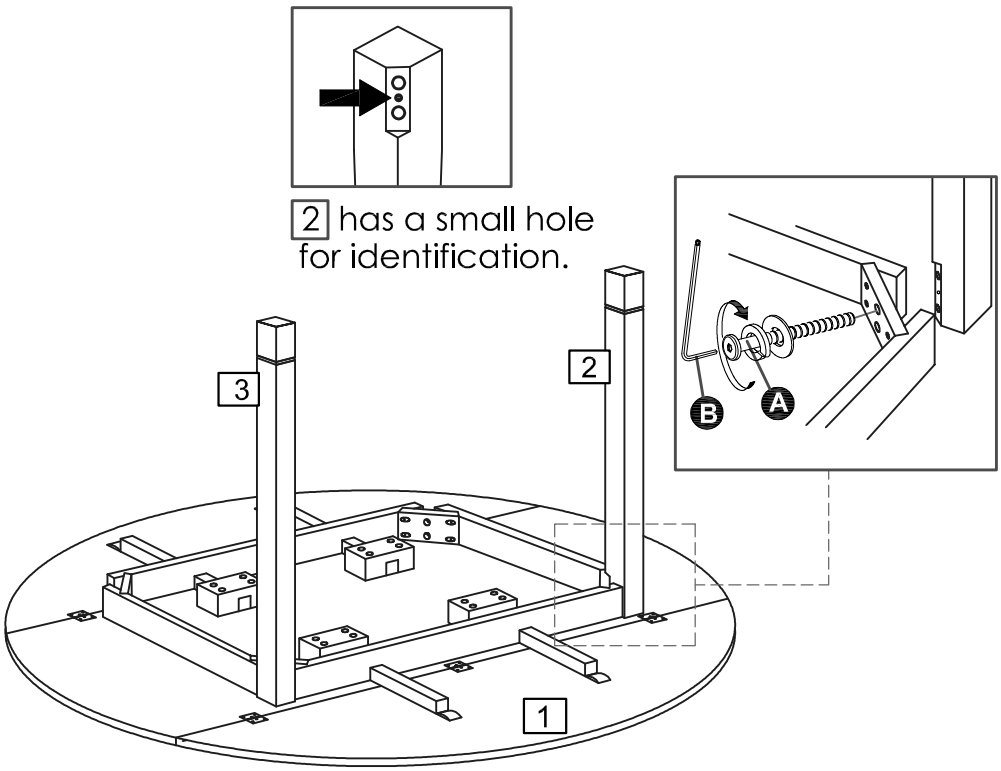

Assembly Instructions

Step 3

Note : It would be useful to ask someone to help you at this stage.

Make sure the leg is at the right position

Slot in Shelf Panel 5 into Table Leg 2 and 3. After that slot in another Table Leg into the Shelf Panel 5.

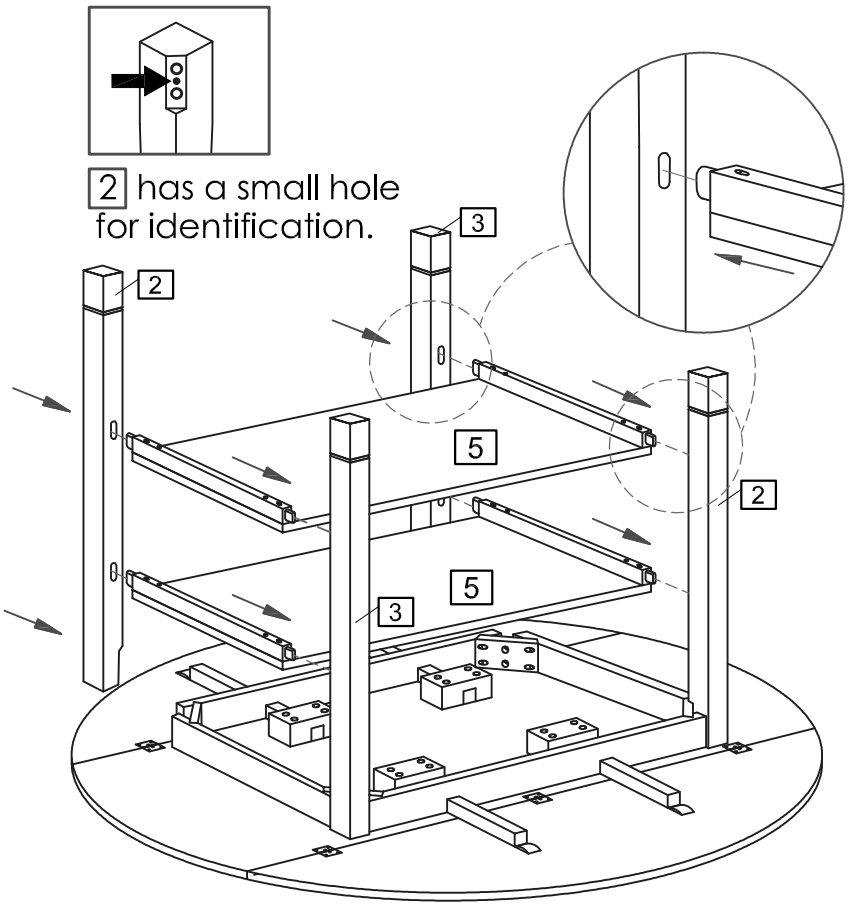

Step 4

a: Follow Step **2** to fix the remaining Table Legs 2 and 3 onto the Table Top 1 .

b: Fix the Shelf Panel Support Rail 4 using screw C with screwdriver.

note : Fully tighten all screws at this step.

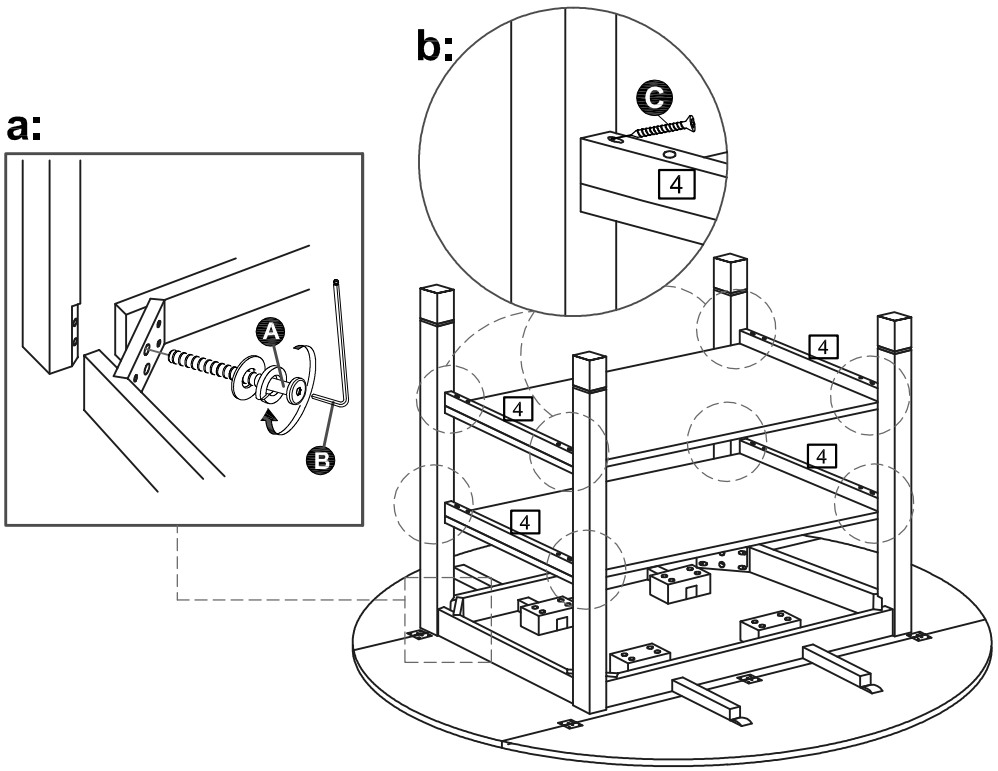

Assembly Instructions

Step 5

Important:
Carefully turn the unit up right.
The table is heavy.
Lift with care.

With help, place the unit in the intended position.

Note : Before use always make sure the unit is secure.

The assembly is complete.

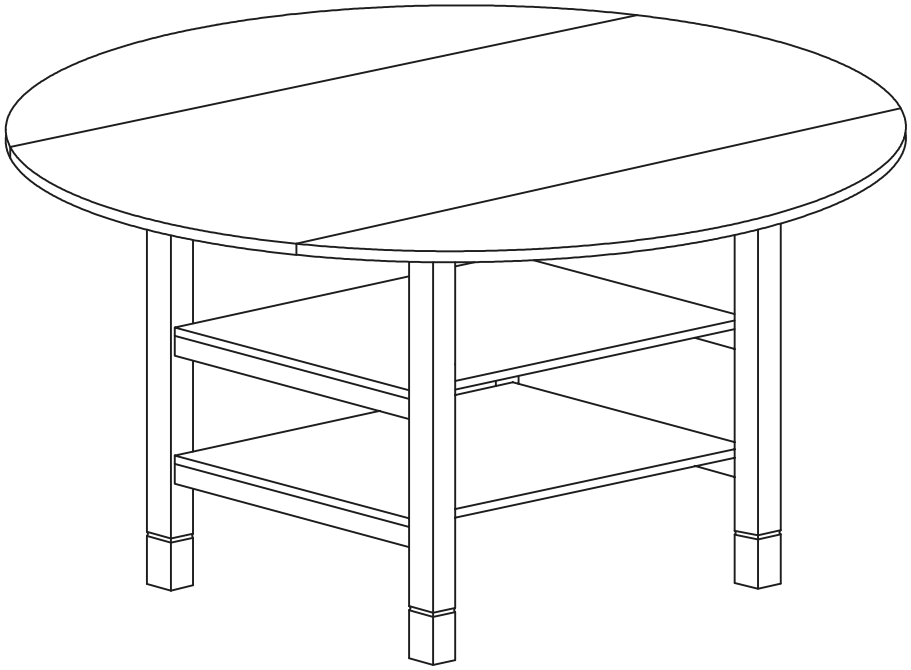

If you need help or have damaged or missing parts, call the Customer Helpline: 0345 640 0800