BUSH

Instruction manual

Bulit-in Gas Hob

BIBGP

a1

技术要求:

1. 贴纸材质:铜版纸;
2. 外形尺寸:A4;
3. 图为说明书封面，黑白印刷，印刷字迹清晰明了.

						名称	英国ARGOS (BUSH商标) PL640SX-E(BIBGP) 说明书		图号 PSMS-ARGOS-01-007
a	1	1	P25ZJ072						材料 铜版纸
标记	处数	分区	更改文件号	签名	年月日	品号：40200200568			
设计			标准化			阶段标记	数量	比例	
校对							1		浙江安德电器有限公司
审核									
工艺			批准			共 1 张	第 1 张		

BUSH

Instruction manual

Bulit-in Gas Hob

BIBGP

You'll soon be enjoying your new Built-in Gas Hob

It all begins here, with your instructions. Don't worry, there's nothing too technical coming up. Just simple, step-by-step guidance to get you up and running quickly. Sound good? Then let's get started.

Help and Guidance

We're here to help you get the most from your Built-in Gas Hob. Should you require any guidance, a simple solution can often be found online at:

www.bush-support.com

If you still require further assistance, call one of our experts on **0345 257 7271.**

Issue-1,1/6/2025

Contents

1 Safety information

Safety information 6

2 Getting to know your Built in Gas Hob

Overview 11

Burner and accessories 12

3 Installing your Bulit in Gas Hob

Installation premises 14

Discharge of flue gases 14

Gas Connection 15

Electrical connection 16

Changing the nozzles 17

4 Using your Built in Gas Hob

Using the Gas Hob 20

5 Care and Maintenance

Cleaning 22

Routine maintenance 23

Technical specifications 24

6 Product support

Troubleshooting 26

Help and assistance 27

Declaration of conformance to product standards 28

Safety information 1

Safety information

Important - Please read these instructions fully before installing or operating

INSTALLATION WARNINGS

IMPORTANT:
This product MUST be installed by a qualified Gas Safe registered installer in accordance with local regulations. Particular attention should be given to the ventilation requirements.
IMPORTANT:Prior to Installation ensure that the local supply conditions (electricity voltage and frequency) are compatible with the requirements of your cooker.
IMPORTANT:Carefully unpack and examine the appliance for any damage. If you think there is a defect, do not use the appliance and contact Bush Product Support on 0345 257 7271. Packaging materials should be collected together and disposed of immediately as they may be harmful to children.

IMPORTANT: Keep the electrical cable of your gas hob away from the hot areas of your cooker; do not let the cable touch the appliance. Keep the cable away from sharp edges and heated surfaces.

IMPORTANT: Ensure that the electric supply cable is not trapped or damaged during installation.

IMPORTANT: In the event that the cable connecting your gas hob becomes damaged , it must be replaced by a suitably qualified person. This cable must not be replaced by an unauthorised person.

IMPORTANT: Protect your gas hob against atmospheric effects. Do not expose your gas hob to effects such as sun, rain, snow etc.

IMPORTANT: The materials surrounding the appliance (cabinets) must be able to withstand a minimum temperature of 100°C.

WARNING: Before obtaining access to terminals, all supply circuits must be disconnected.

DURING USAGE

IMPORTANT:This appliance can be used by children aged from 8 years and above and persons with reduced physical, sensory or mental capabilities or lack of experience and knowledge if they have been given supervision or instruction concerning use of the appliance in a safe way and understand the hazards involved. Children shall not play with the appliance. Cleaning and user maintenance shall not be made by children without supervision.

WARNING: The appliance and its accessible parts become hot during use. Care should be taken to avoid touching heating elements . Children less than 8 years of age shall be kept away unless continuously supervised.

WARNING: Cooking on a hob with fat or oil can be dangerous and should not be left unattended.
WARNING: NEVER try to extinguish a cooking fire with water. Instead switch off the appliance and cover flame e.g. with a lid or a fire blanket.

CAUTION: Do not allow children in the kitchen when cooking or while hob parts may still be hot. Many parts of the hob will become hot and present a considerable hazard to children.

CAUTION: Before starting to use your appliance, ensure curtains, paper or flammable items are kept away from your appliance. Do not keep flammable materials inside of or around your gas hob.

Safety information

Important - Please read these instructions fully before installing or operating

WARNING: If the surface is cracked, switch off the appliance to avoid the possibility of electric shock.

IMPORTANT: Position pans over the centre of the burners and turn handles to a safe position where they can not be knocked or grabbed.

IMPORTANT: Make sure the gas hob control knobs are all in the off position when not in use.

IMPORTANT: If you do not intend to use your gas hob for a long period of time turn off the gas and electric supply to the gas hob.

CAUTION: Using gas cooking appliances results in the production of heat, moisture and the products of combustion. Ensure that the room where your gas hob is installed is well ventilated particularly while the gas hob is in use. Keep natural ventilation holes open or install a mechanical ventilation device (extractor hood) Prolonged intensive use of your gas hob may call for additional ventilation (by opening a window) or by increasing the level of mechanical ventilation where present.

GENERAL SAFETY WARNINGS

IMPORTANT:This appliance has been designed for non-professional, domestic use only. Do not use this gas hob for commercial use or any other application e.g. room heating.

WARNING: Danger of fire: do not store flammable items on or near the cooking surfaces or inside the oven.

IMPORTANT: Your appliance is produced in accordance with all applicable local and international standards and regulations.

IMPORTANT:Maintenance and repair work must only be performed by authorised servicet echnicians. Installation and repair work that is carried out by unauthorised technicians is dangerous andcould invalidate your guarantee.

IMPORTANT: Do not hang towels, dishcloths or clothes from the hob or its controls.

CLEANING AND MAINTENANCE

IMPORTANT: Always turn the appliance off before operations such as cleaning or maintenance.
IMPORTANT: Do not remove the control knobs to clean the control panel.

WARNING:
Do not use harsh abrasive cleaners or sharp metal scrapers to clean the glass since they can scratch the surface, which may result in shattering of the glass.

WARNING: Please take care during the handling as the bottom may have sharp edge.

TO MAINTAIN THE EFFICIENCY AND SAFETY OF YOUR APPLIANCE, WE RECOMMEND YO U ALWAYS USE OUR AUTHORISED SERVICE AGENTS AND ORIGINAL SPARE PARTS.

FOR ASSISTANCE CALL BUSH PRODUCT SUPPORT 0345 257 7271.

If you require any technical guidance or find that your product is not operating as intended, a simple solution can often be found in the **Troubleshooting** section of these instructions,

Getting to know your Built-in Gas Hob

2

Getting to know your Built in Gas Hob

You'll be up and running in no time

Ready? Let's begin...

Please read these instructions carefully. They contain important information which will help you get the best from your Built-in Gas Hob and ensure safe and correct installation and operation.

If you require any further assistance, our technical experts are happy to help. For full details, refer to the product support section at the end of these instructions.

Getting to know your Built in Gas Hob

You'll be up and running in no time

Overview

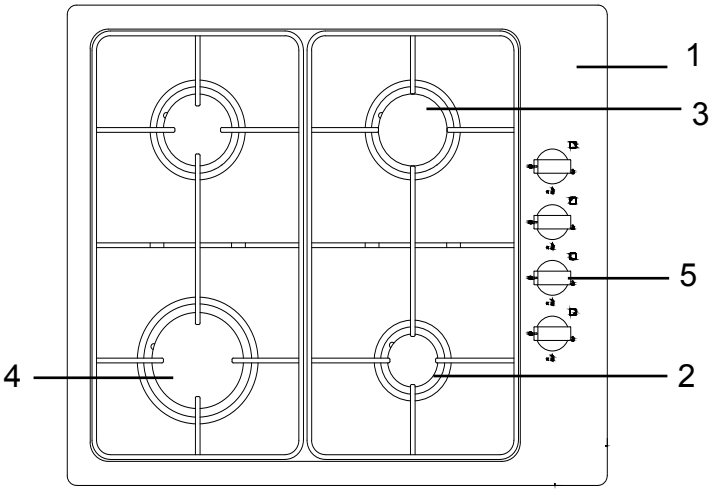

1. Hob
2. Auxiliary burner
3. Semi-Rapid burner
4. Rapid burner
5. Control knobs

Knob Symbols

⚠ All operation positions must be set between the maximun and minimun flow settings, and never between the maximun setting and the off position.

•	**Off - No gas flow**
★	**On –Maximum gas flow**
	Minimum gas flow

If you require any technical guidance or find that your product is not operating as intended, a simple solution can often be found in the **Troubleshooting** section of these instructions,

Getting to know your Built in Gas Hob

You'll be up and running in no time

Burner

A-Burner cap
B-Burner Head
C-Burner Bowl
D-Thermocouple
E-Electrode

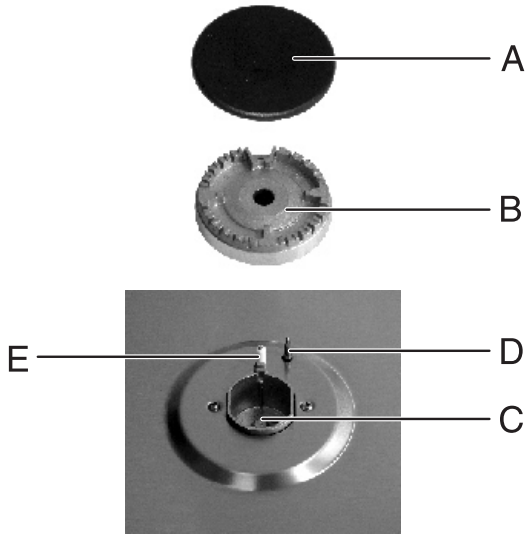

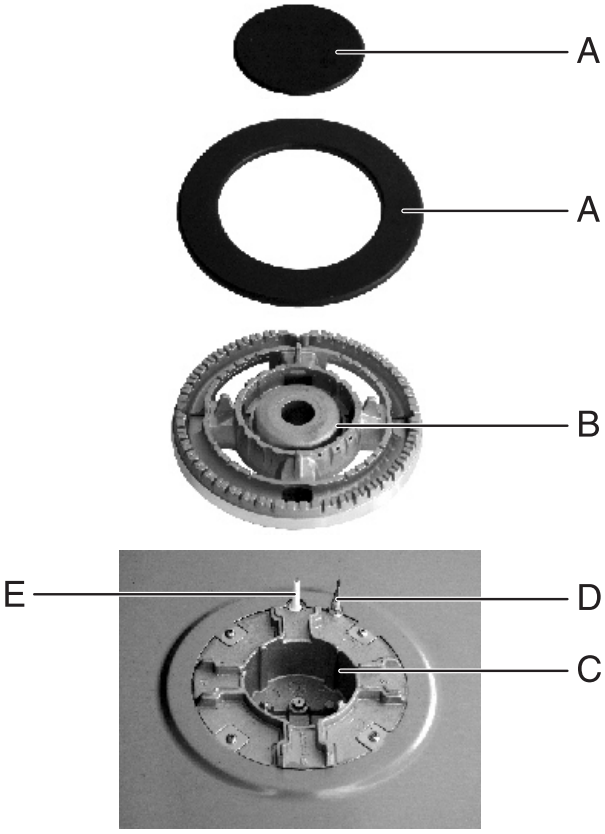

Fig. 1

Accessories

1. Bracket*4
2. Screw*4
3. Seal*1
4. LPG Nozzel*4

1

2

3

4

Installing your Built-in Gas Hob

3

Installing your Built-in Gas Hob

Bringing it all together

CAUTION: This appliance must only be installed and used in rooms with permanent ventilation to local standards.
Installation of the appliance and its connection to the electrical mains must only be carried out by QUALIFIED PERSONEL.
Before any procedure, it is important to check that the appliance is DISCONNECTED from the electrical mains. The Manufacturer declines all responsibility for any damage arising from installation in breach of the regulations in force or from failure to comply with the accident prevention regulations.

Installation premises

For proper operation of a gas appliance, the air necessary for the combustion of the gas must be able to flow into the room naturally. The air must flow into the room directly through openings in the outside walls. These openings must have an unobstructed cross-section not less than $2m^3$/hfor each kw of power (see total power in kw on the appliance nameplate).

This opening must be constructed so that it will not be obstructed from inside or outside, or constructed close to the floor. The opening is recommended to be on the side opposite to that on which the flue gases are discharged. If it is not feasible to provide these openings in the room where the appliance is installed, the necessary air may be taken from an adjacent room, provided that:

- this room is not a bedroom or a hazardous environment;
- this room has ventilation;
- the ventilation between the room where the appliance is installed and the adjacent room has openings.

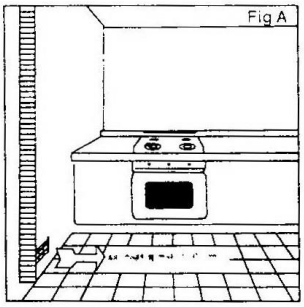

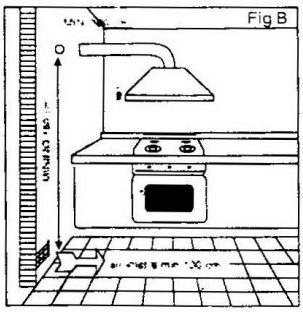

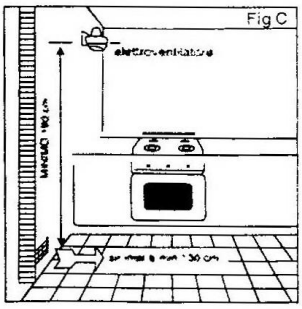

Discharge of flue gases

Gas cooking appliances must discharge their flue gases through hoods connected directly to flues or the outdoors. If it is not possible to install the hood (fig. B) an electric fan must be installed on the outside wall or the window of the room, provided it is possible for the ventilation opening to be increased in proportion to the delivery rate of the fan (fig. C). For a kitchen, the delivery rate of this electric fan must guarantee an hourly air exchange of 3-5 times its volume. In both instances, the use of flues already used by other appliances to discharge the flue gases is forbidden.

Installing your Built-in Gas Hob

Bringing it all together

Connection to the gas supply

The gas connection must be made in accordance with the local standards. When installing, fit a safety tap at the end of the pipeline. The appliance leaves the factory tested and set for the type of gas indicated on the plate inside the bottom guard, close to the gas connection pipe. Make sure that the type of gas to be supplied to the appliance is the same as that shown on the plate. Otherwise, follow the instructions provided in the "Adapting to different types of gas" section.

For maximum efficiency and minimum consumption, make sure that the gas supply pressure complies with the values shown in the gas used is different from that specified (or variable).a suitable pressure regulator must be installed on the supply pipeline.

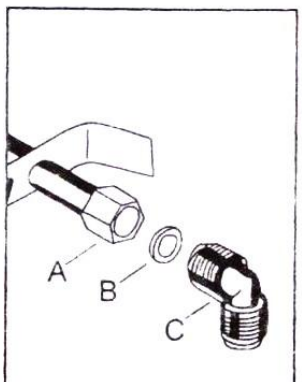

A) End of gas train with nut
B) Gasket
C) Adjustable union

The union must be fitted on the end of the gas train. Complete with GJ1/2 " threaded nut, fitting the gasket between the components as shown in the illustration. The gaskets must comply with the local standards. Screw the parts together without forcing, fit the union so that it points in the direction required then tighten all parts.

Connection

Make the connection to the gas system using a rigid metal pipe and regulation unions, or with a stainless steel hose complying with the local standard. If metal hoses are used, take care that they do not come into contact with mobile parts and are not crushed. This must also be checked if the hob is to be combined with an oven.
The gas intake connection of the appliance has a " male thread."
When making the connection, take care not to apply stresses of any kind to the appliance.

When the installation is complete, always check that all the unions are absolutely tight using a soapy solution. **Never use a flame to make this check.**

Installing your Built-in Gas Hob

Bringing it all together

Electrical connection

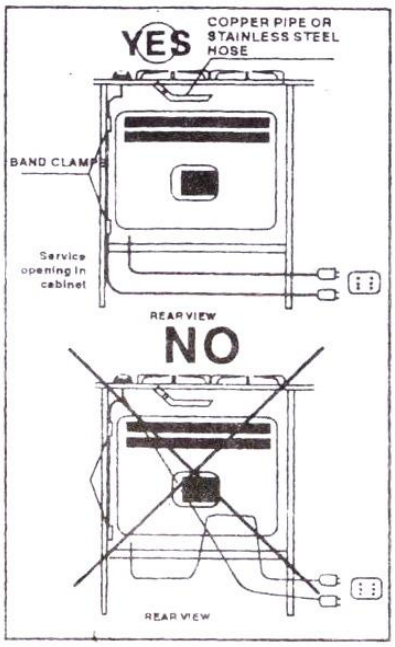

The connection must be made in accordance with the regulations and laws in force.
Before making the connection, make sure that:

1) The safety circuit-breaker and the electrical system are able to withstand the load of the appliance (see nameplate).
2) The power supply system has an earth connection in good working order in accordance with the regulations in force;
3) The socket or omni polar switch use are easily accessible with the appliance installed.

The appliance is equipped with a three-pin plug, connect the plug to a suitable safety socket.
Important: When inserting and pulling power plug, be careful not to touch charged metal sheet. Do not touch or test the inside of the power socket by hand or by conductive materials (such as wire, nails, pins, etc.)

If you wish to make a direct connection to the mains, an omni polar switch with a gap between the contacts of at least 3 mm, of suitable rating for the load and complying with the regulations in force, must be installed between the appliance and the mains. The switch must not break a contact in the yellow/green earth wire.
The brown live wire (connected to the "L" terminal of the terminal board) must always be connected to the live wire of the power supply mains.
In all cases, the power supply lead must be positioned so that it does not reach a temperature 50 degree above the room temperature at any point.

One example of an ideal route is shown in the illustration. The cable is guided by means of band clamps fixed to the side of the cabinet, in order to avoid any contact with the appliance underneath the hob.

Replacing the power supply lead

If the lead has to be replaced, only HO5RR-F or HO5RN-F type cables suitable for the load and the operating temperature must be used. In addition, the yellow/green earth wire must be about 2 cm longer than the live and neutral wires.

IMPORTANT: The wires in the mains lead are coloured in accordance with the following code:

- Green and yellow: Earth
- Blue: Neutral
- Brown: Live

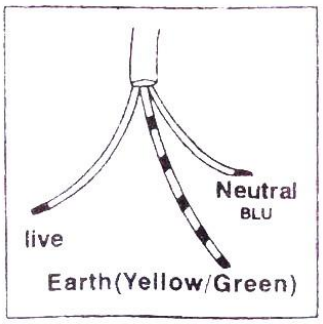

Installing your Built-in Gas Hob

Bringing it all together

Adapting to the different types of gas

Changing the nozzles

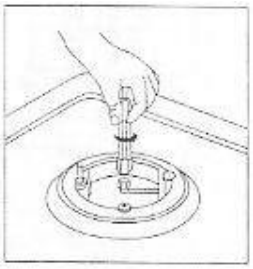

1) Remove the pan standee.
2) Remove the burner caps and flame caps from the burners.
3) Use a size 7 socket wrench to unscrew and remove the nozzles, replacing them with those corresponding to the type of gas to be used (see the table).
4) Reassemble the parts, reversing the operations described above.
5) Then replace the setting data (close to the mains gas connection) with the one for the new type of gas. If the pressure of the gas used is different from that specified (or variable), a suitable piped gas pressure regulator complying with the standard must be installed on the supply pipeline.

Setting the minimum level

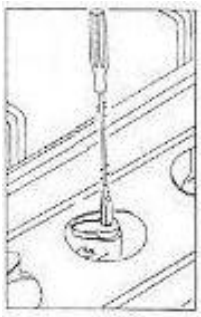

1) Light the burner as already described.
2) Turn the tap to the minimum flame position.
3) Remove the control knobs.
4) LPG TO NG:
   Use a thin blade screwdriver to turn the by-pass screw located above left of the gas valve, shaft as shown right. Turn gently the by-pass screw clockwise to the end completely then turn it anti-clockwise 1/2 turn for the Triple flame burner, 3/4 turn for the Large rapid burner, 1/2 turn for the Medium Semi-rapid Burner and 3/8 turn for the Auxiliary burner.
   NG TO LPG:
   Use a thin blade screwdriver to turn the by-pass screw located above left of the gas valve shaft as shown right. Turn gently the by-pass screw clockwise to the end.

5）Finally, check that the burner does not go out when the tap is turned quickly from the maximum to the minimum position.

If you require any technical guidance or find that your product is not operating as intended, a simple solution can often be found in the **Troubleshooting** section of these instructions,

Installing your Built-in Gas Hob

Bringing it all together

Building into fitted kitchen units

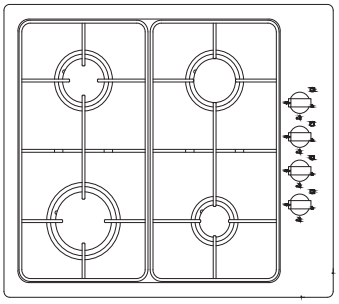

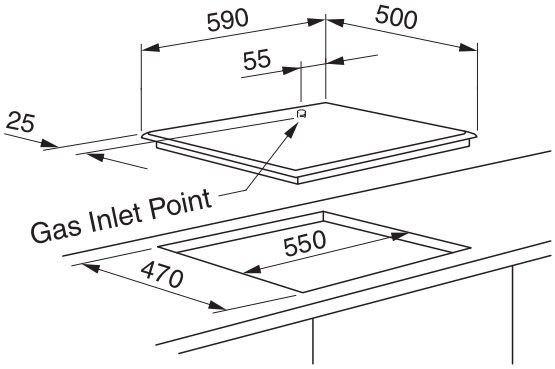

These hobs are designed for installation in fitted kitchen units up to 600mm deep with suitable characteristics.
Any cabinet side panels taller than the height of the hob itself must be at least 150mm away from the opening into which the hob is inserted.

Insertion and fixing

Before inserting the hob in the installation opening, place the special gasket around the bottom edge of the hob.
It is important to fix this gasket evenly, without gaps or overlapping, to prevent liquid from seeping underneath the hob.

1) Remove the pan stands and the burner caps and turn the hob upside down, taking care not to damage the ignition plugs and the thermocouples.

2) Place the gasket around the bottom edge of the hob as shown in the illustration on the right.

3) Place the hob in the installation opening and push it down so that the hob is resting firmly on the cabinet, as show in the illustration. The side springs will hold it in place.

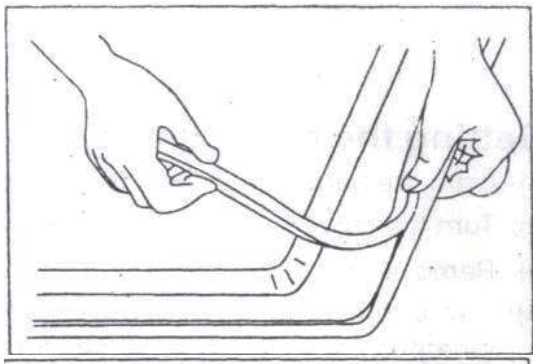

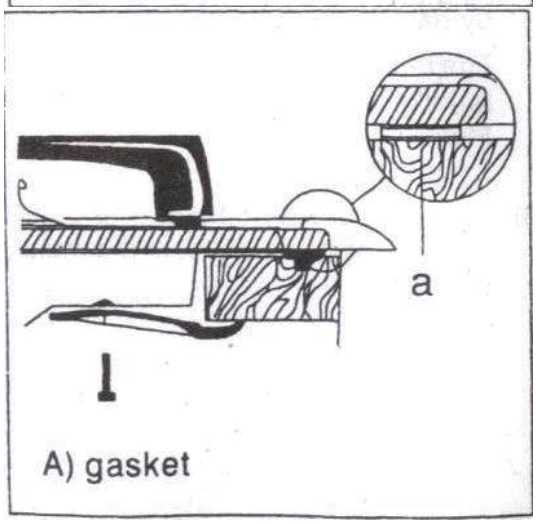

Using your Built-in Gas Hob

4

Using your Built-in Gas Hob

Getting the most from your appliance

Lighting the burners

To obtain a flame more easily, light the burner before placing a cooking utensil on the pan stand

To light a burner, proceed as follow: for Version with lighting integrated in the control knob push the knob of the burner fully down and turn it anticlockwise

to the "maximum flow" setting symbol, or press the button if the appliance has individual lighting.

- After lighting the flame, keep the knob pressed for about 10 seconds: this time is necessary to heat up the "thermocouple"and activate the safety valve, which would otherwise cut off the gas flow.

Then check that the flame is even and turn the control knob to adjust the flame as required

In the instance of a power cut, place a flame near the burner and proceed as already described.

If the flame does not light after a few attempts, check that the "burner cap" and "flame cap" are correctly positioned.

To turn off the flame, turn the control knob clockwise to the ● symbol.

Before removing pans from the burners, always lower or turn off the flame.

For correct use of the hob

For lower gas consumption and better efficiency: Use only flat-bottomed pans of dimensions suitable for the burners, as shown in the table below. Also, as soon as a liquid comes to the boil take care to turn the flame down to a level that will just keep it boiling.

Burner	minimum diameter	maximum diameter
Large(rapid)	180mm	220mm
Medium(semi-rapid)	120mm	200mm
Small(Auxiliary)	80mm	160mm
Triple Flame	220mm	260mm

During cooking processes involving fats or oils, watch your foods carefully because these substances may catch fire if brought to high temperatures.

If you require any technical guidance or find that your product is not operating as intended, a simple solution can often be found in the **Troubleshooting** section of these instructions,

Care and maintenance 5

Care and maintenance

Looking after your appliance

Before each operation, disconnect the appliance from the electrical mains and allow it to cool down.

General cleaning

Wash enameled parts with lukewarm water and detergent: do not use abrasive products which might damage them.
Wash the flame caps and burner caps often with boiling water and detergent, taking care to remove all deposits
The hob pan stands can also be washed in a dishwasher
For stubborn dirt, use ordinary non-abrasive detergents or specific commercial products. We strongly advise you not to use scouring pads. Steel wool or acids for cleaning.

Hob

Clean the hob regularly with a soft cloth wet with lukewarm water and a little liquid detergent. Do not use the following products:
- household detergents or bleaches;
- soaped scouring pads are not suitable for non-stick utensils;
- steel wool scouring pads;
- stain removers for baths or sinks.

If the hob gets very dirty, use specific commercial products.

Ignition plug

Automatic burner ignition is provided (when installed) by a ceramic "plug" and a metal electrode (B in fig.1). Periodically clean these parts of the hob thoroughly. In addition, to avoid ignition difficulties, check that the cavities in the burner are not obstructed.
To remove deposits from the burner cavities, remove the cap and separate the two parts (see diagram on the right). After cleaning, put the two parts back together and return them correctly to their position. After washing, replace the hob pan stands, checking that they are correctly positioned.

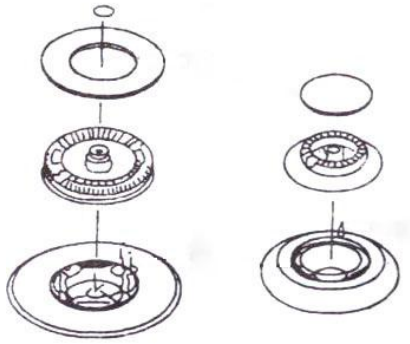

If you require any technical guidance or find that your product is not operating as intended, a simple solution can often be found in the **Troubleshooting** section of these instructions,

Care and maintenance

Looking after your appliance

Routine maintenance

Have the condition and efficiency of the gas pipe and the pressure regulator (if installed) checked periodically. If anomalies are found, do not repair components but have the faulty component replaced. To ensure good performance and safety, the gas regulator taps must be greased periodically.

Periodic lubrication of the taps and any other appliance service must only be carried out by Authorised Personnel.

Abnormal operation

Any of the following are considered to be abnormal operation and may require servicing:

- Yellow tipping of the burner flame.
- Sooting up of cooking utensils.
- Burners not igniting properly.
- Burners failing to remain alight.
- Burners extinguished by cupboard doors.
- Gas valves, which are difficult to turn.

In case the appliance fails to operate correctly, contact our Support Team on 0345 257 7271.

If you require any technical guidance or find that your product is not operating as intended, a simple solution can often be found in the **Troubleshooting** section of these instructions,

Care and maintenance

Looking after your appliance

Technical Specification

Model	BIBGP
Voltage and frequency	220-240V AC/50Hz
Total power	7500W
Power for rapid burner	3000W
Power for semi-rapid burner	1750W
Power for auxiliary burner	1000W

Energy Fiche

	Symbol	Value	Unit
Brand	-	BUSH	-
Model identification	-	BIBGP	-
Type of hob	-	Gas hob	-
Number of gas burners	-	4	-
Energy efficiency per gas burner	$EE_{gas\ burner}$	Rapid burner: 60.4% Semi-rapid burner-1: 60.9% Semi-rapid burner-2: 61.5% Auxiliary burner: N.A.	-
Energy efficiency for the gas hob	$EE_{gas\ hob}$	60.9%	-

Product support 6

Product support

Help is always at hand

Troubleshooting

1. If no electrical functions appear to work, check the hob isolation switch has not been turned off also check the fuse in the switch and the circuit breaker in you consumer unit

2. After replacing the fuse or resetting the circuit breaker turn on individual parts of your hob one at a time to check function

3. DO NOT ATTEMPT TO REPAIR THIS HOB YOURSELF. CALL BUSH PRODUCT SUPPORT ON 0345 257 7271 OR CONSULT A GAS SAFE REGISTERED INSTALLER

Problem	Possible Cause	Solution
Erratic flames on the Gas Hob	Debris in the Gas burners or jets.	Please contact the product support team for assistance from a engineer.
Strong smell of Gas from hob	Possible Gas leak	Turn off ALL gas supply, open windows and doors for immediate ventilation. Contact product support team for an engineer service call.
The hob burners do not operate correctly	Check if the burner parts are correctly assembled (especially after cleaning).	The gas supply pressure may be too low/high. For appliances working with bottled LPG, the LPG cylinder may be depleted.
Ignition not working properly	Possible fault with the igniter or ignition system	Call product support team for assistance and possible engineer visit.

Product support

Help is always at hand

Help and assistance

If you require any technical guidance or find that your Built In Hob is not operating as intended, a simple solution can often be found in the **Troubleshooting** section of these instructions or online at www.**bush**-support.com

If you still require further assistance, call one of our experts on **0345 257 7271***. To help give us give you a fast and efficient service please have the following information ready:

Model Ref.		You can find these on the rating plate - a small information panel (usually a sticker or metal plate) on the rear of your appliance
Serial number		
Date of purchase		This will be shown on your receipt

Local call rates applies*

Lines open 09:00- 17:30 Monday to Friday.

*Calls to Bush enquiry lines may attract a charge and set up fee from residential lines depending on your call plan/tariff. Mobile and other providers costs may vary, see www.bt.com/pricing for details.

For Security and training purposes, telephone calls to and from customer service centres maybe recorded and monitored. Calls from Republic of Ireland will attract international call charges.

Product support

Help is always at hand

Declaration of conformance to product standards

This appliance conforms to all relavant standards applicable to domestic appliances sold in the UK

Disposal

This appliance/fitting is marked according to the European directive 2012/19/EU on Waste Electrical and Electronic Equipment (WEEE). By ensuring this product is disposed of correctly, you will help prevent potential negative consequences for the environment and human health, which could otherwise be caused by inappropriate waste handling of this product.

The symbol on the product, or on the documents accompanying the product, the **crossed out wheelie bin** symbol, indicates that this appliance/fitting may not be treated as household waste. Instead it shall be handed over to the applicable collection point for the recycling of electrical and electronic equipment.

Disposal must be carried out in accordance with local environmental regulations for waste disposal.

For more detailed information about treatment, recovery and recycling of this product, please contact your local authority, your household waste disposal service or the retailer where you purchased the product.

Call us now and activate your 12 month guarantee

Thank you for choosing Bush. Your new product is guaranteed against faults and breakdowns for 12 months. Don't forget to register it with us today so we can provide you with our best possible after-sales service and useful updates.

www.bushregistration.co.uk

FREEPHONE*

0800 597 8548

Lines open 09:00- 17:30 Monday to Friday.

Your Bush Guarantee

This product is guaranteed for twelve months from the date of original purchase. Any defect that arises due to faulty materials or workmanship will be repaired free of charge (or if applicable the product will be replaced or the purchase price refunded) where possible during this period by the dealer from who your purchased the unit.

The guarantee is subject to the following provisions:

- The guarantee does not cover accidental damage, misuse, cabinet parts, knobs or consumable items.
- The product must be correctly installed and operated in accordance with the instructions contained in the manual.
- It must be used solely for domestic purposes. The guarantee will be rendered invalid if the product is re-sold or has been damaged by inexpert repair.
- Specifications are subject to change without notice.
- Bush disclaim any liability for loss or damage arising from the breakdown of the product.
- This guarantee is in addition to and does not diminish your statutory or legal rights.

Important Data Protection Information

To find out how we and Domestic & General Insurance Plc use your data please refer to the guarantee registration material or visit www.bushregistration.co.uk

If you require any technical guidance or find that your product is not operating as intended, a simple solution can often be found in the **Troubleshooting** section of these instructions,

BUSH

Contact:

www.argos-support.co.uk
www.bush-support.com
Helpline: 0345 257 7271
Produced in China for Argos Limitde, London, EC1M 6HA, UK.
Argos (N.I.) Ltd.,Forestside Shopping Centre, Upper Galwally, Belfast, BT8 6FX, UK.