BUSH

Instruction manual

BUSH Built-in Fan Oven

BIBCP

BIBGP

You'll soon be enjoying your new Built-in Oven

It all begins here, with your instructions. Don't worry, there's nothing too technical coming up. Just simple, step-by-step guidance to get you up and running quickly. Sound good? Then let's get started.

Help and Guidance

We're here to help you get the most from your Built-in Oven. Should you require any guidance, a simple solution can often be found online at:

www.bush-support.com

If you still require further assistance, call one of our experts on **0345 257 7271.**

Issue-2,11/6/2025

Contents

1 Safety information

Safety information 6

2 Getting to know your Built-in Oven

Ready? Let's begin 10

Accessories 11

3 Installing your Built-in Oven

Cabinet installation 14

Electrical Connection 15

4 Using your Built-in Oven

Controls 18

Oven functions Programming 19

General oven and Cooking tips 20

5 Care and Maintenance

Cleaning 24

Replacing the lamps 25

Removing the Inner pane of glass & cleaning the glass 25

Technical specification 26

6 Product support

Troubleshooting 28

Help and assistance 29

Declaration of conformance to product standards 30

Disposal 30

Guarantee 31

Safety information 1

Safety information

Important - Please read these instructions fully before installing or operating

INSTALLATION WARNINGS

IMPORTANT: Prior to Installation ensure that the local supply conditions (electricity voltage and frequency are compatible with the requirements of your built-in oven.

IMPORTANT: Carefully unpack and examine the appliance for any damage. If you think there is a defect, do not use the appliance and contact BUSH Product Support on 01759 487838. Packaging materials should be collected together and disposed of immediately as they may be harmful to children.

IMPORTANT: Keep the electrical cable (not supplied of your built-in oven away from the hot areas of your appliance, do not let the cable touch the appliance. Keep the cable away from sharp edges and heated surfaces.

IMPORTANT: Ensure that the electric supply cable is not trapped or damaged during installation.

IMPORTANT: In the event that the cable connecting your built-in oven becomes damaged, it must be replaced by a suitably qualified person. This cable must not be replaced by an unauthorised person.

IMPORTANT: Protect your built-in oven against atmospheric effects. Do not expose your oven to effects such as sun, rain, snow etc.

IMPORTANT: The materials surrounding the appliance (cabinets) must be able to withstand a minimum temperature of 100°C.

IMPORTANT: When using your oven for the first time your built-in oven may give off an unusual odour from the heating elements and insulation materials. This is normal for cooking appliances. To eliminate this odour run the oven at 250 degrees for 40-60 mins with the oven empty.

WARNING: Before obtaining access to terminals, all supply circuits must be disconnected.

DURING USAGE

IMPORTANT: This appliance can be used by children aged from 8 years and above and persons with reduced physical, sensory or mental capabilities or lack of experience and knowledge if they have been given supervision or instruction concerning use of the appliance in a safe way and understand the hazards involved. Children shall not play with the appliance. Cleaning and user maintenance shall not be made by children without supervision.

WARNING: The appliance and its accessible parts become hot during use. Care should be taken to avoid touching heating elements. Children less than 8 years of age shall be kept away unless continuously supervised.

WARNING: NEVER try to extinguish a cooking fire with water. Instead switch off the appliance and cover flame e.g. with a lid or a fire blanket.

CAUTION: Do not allow children in the kitchen when cooking or after, as the parts may still be hot. Many parts of the oven will become hot and present a considerable hazard to children.

CAUTION: When the oven is hot never touch the oven glass by hand or with tools.

Safety information

Important - Please read these instructions fully before installing or operating

CAUTION: Before starting to use your appliance, ensure curtains, paper or flammable items are kept away from your appliance. Do not keep flammable materials inside of or around your oven.

CAUTION: Take care when closing the oven door that there is nothing obstructing it from closing as this may break the glass door.

IMPORTANT: When using the grill the oven door must be kept closed.

IMPORTANT: Make sure the oven control knobs are all in the off position when not in use.

IMPORTANT: If you do not intend to use your built-in oven for a long period of time turn off the electric supply to the oven.

GENERAL SAFETY WARNINGS

IMPORTANT: This appliance has been designed for non-professional, domestic use only. Do not use this oven for commercial use or any other application e.g. room heating.

WARNING: Danger of fire: do not store flammable items on or near the cooking surfaces or inside the oven.

IMPORTANT: Do not try to lift or move this appliance by pulling on the door handle.

WARNING: Ensure that the appliance is switched off before replacing the lamp to avoid the possibility of electric shock.

IMPORTANT: Your appliance is produced in accordance with all applicable local and international standards and regulations.

IMPORTANT: Maintenance and repair work must only be performed by authorised service technicians. Installation and repair work that is carried out by unauthorised technicians is dangerous and could invalidate your guarantee.

IMPORTANT: When the door of the oven is open, do not hang or lean anything on it. You may unbalance your appliance or damage the door or door hinges.

IMPORTANT: Do not hang towels, dishcloths or clothes from the built-in oven or its handles.

CLEANING AND MAINTENANCE

IMPORTANT: Always turn the appliance off before operations such as cleaning or maintenance. You can do this by switching the built-in oven off using cooker isolation switch.

IMPORTANT: Do not remove the control knobs to clean the control panel.

WARNING: Do not use harsh abrasive cleaners or sharp metal scrapers to clean the oven door glass since they can scratch the surface, which may result in shattering of the glass.

TO MAINTAIN THE EFFICIENCY AND SAFETY
OF YOUR APPLIANCE, WE RECOMMEND YOU ALWAYS USE OUR AUTHORISED SERVICE AGENTS AND ORIGINAL SPARE PARTS.

FOR ASSISTANCE CALL BUSH PRODUCT SUPPORT 0345 257 7271.

Getting to know your Built-in Oven

2

Getting to know your Built-in Oven

You'll be up and running in no time

Ready? Let's begin...

Please read these instructions carefully. They contain important information which will help you get the best from your Built-in Oven and ensure safe and correct installation and operation.

If you require any further assistance, our technical experts are happy to help. For full details, refer to the product support section at the end of these instructions.

Getting to know your Built-in Oven

You'll be up and running in no time

Built-in Oven Accessories

1. 1 x Baking tray
2. 1 x Grill insert
3. 1 x Grill pan handle
4. 1 x Chrome shelf
5. 1 x User Manual
6. 1 x Fixing kit

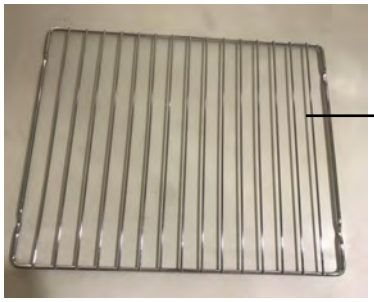

Tools needed for installation

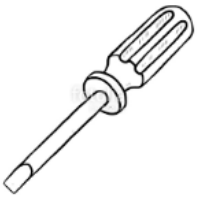

Cross head screwdriver

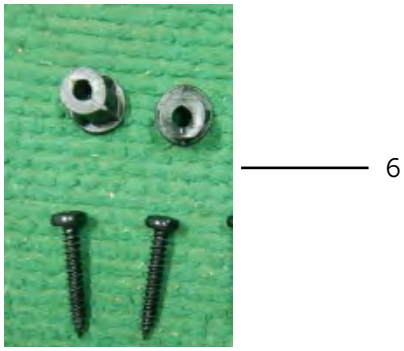

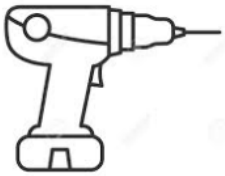

Electric drill

Pencil

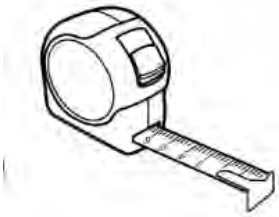

Tape measure

If you require any technical guidance or find that your product is not operating as intended, a simple solution can often be found in the **Troubleshooting** section of these instructions,

Installing your Built-in Oven

3

Installing your Built-in Oven

Bringing it all together

Installation

This appliance should be installed by a competent person or qualified electrician in a accordance with the regulations in force (All relevant British Standard/ Codes of Practice/relevant Building/IET regulations) and in a well ventilated space. Please read instructions before installing and using this appliance.

Important: - The power supply to the appliance must be switched o° before any adjustments or maintenance work is carried out.

Installation of Built-in Ovens

In order to ensure that the built-in appliance functions properly, the cabinet containing it must be appropriate .The figur below gives the dimensions of the cut-out for installation under the counter or in a wall cabinet unit.

Built-under Oven Housing

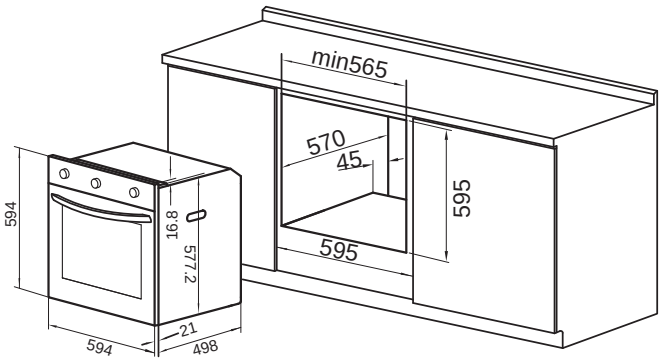

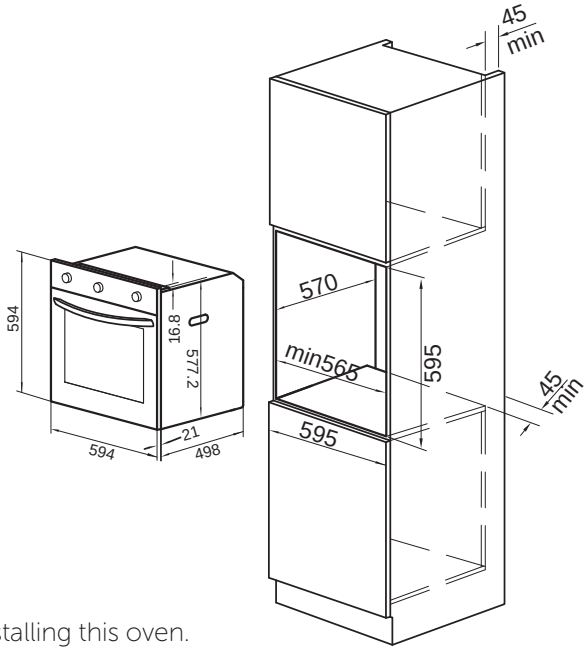

The worktop and any associated hob should be fitted BEFORE installing this oven.

It is recommended that if installing a built-in oven directly under the hob then there should be a minimum air gap of 20 mm between the oven and the bottom of the hob. Failure to maintain a suitable clearance may impair the performance of the hob.

Ensure that air can flow freely around the housing area. If the oven is being installed into a fully enclosed built-under oven housing unit it may be necessary to cut a small slot in the top of the plinth fitted under the unit. Cut a sectio in the centre of the plinth that is 400mm wide and 45mm deep to allow air to pass under the unit. Alternatively cut a section 400 x 450mm in the base of the centre of the plinth.

Failure to allow adequate ventilation to the appliance may result in overheating or damage to adjacent units and could invalidate the guarantee. Surfaces of furniture and walls adjacent to the appliance should be heat, splash and steam resistant. All cabinet doors must be at least 4mm from the oven at all points.

Certain types of vinyl or laminate kitchen furniture are particularly prone to heat damage and discolouration.

When placing the oven in the housing, do not use the oven door or handle as a lever for lifting the oven as damage may result. When you open the oven door, you will see 2 screw holes on either side of the oven where you fix the oven to the cabinetry.

The oven should then be secured to the housing by fitting screw provided into these holes.

If you require any technical guidance or find tha your product is not operating as intended, a simple solution can often be found in the **Troubleshooting** section of these instructions,

Installing your Built-in Oven

Bringing it all together

Provision for Ventilation

The appliance housing used must provide adequate ventilation.
For built-in installation, a minimum ventilation space of
85 – 90mm 40mm must exist between the rear of the appliance and the back of the housing or an adjacent wall.
If a tall housing is to be installed flush with the ceiling, a 20cm^2 ventilation cut-out must be provided at the top of the housing.

Electrical Connection

This appliance must be installed by a qualified electrician
This must be plugged directly into the wall socket. Do not use an extension lead or multi-socket adapter.
to comply with the relevant Institution of Engineering and Technology (I.E.T.) regulations and also the local electricity supply company requirements.
If preferred, where a dedicated cooker outlet is available, the product may be hard-wired to the existing outlet.

WARNING: THIS APPLIANCE MUST BE EARTHED
This appliance must be connected by a competent person, using fixed wiring via a double pole switched fused spur outlet, protected by a 13A fuse.
We recommend that the appliance is connected by a qualified electrician, who is a member of the N.I.C.E.I.C. and who will comply with the I.E.T. and local regulations. The wires in the mains lead are coloured in accordance with the following code:

This appliance must not be connected to an ordinary domestic power point.
The mains terminal is situated on the back of the oven.

- **GREEN AND YELLOW = EARTH**
- **BLUE = NEUTRAL**
- **BROWN = LIVE.**

As the colours of the wires in the mains lead for the appliance may not correspond with the coloured markings identifying the terminals in your spur box, proceed as follows:

1. The wire which is coloured green and yellow must be connected to the terminal marked E (Earth) or coloured Green.
2. The wire which is coloured blue must be connected to the terminal marked N (Neutral) or coloured Black.
3. The wire which is coloured brown must be connected to the terminal marked L (Live) or coloured Red.

Connect the cable to the correct terminals. Check that the links are correctly fitted and that the terminal screws are tight. Secure the mains cable using the cable clamp. Ensure the cable route avoids the risk of trapping or touching hot surfaces.

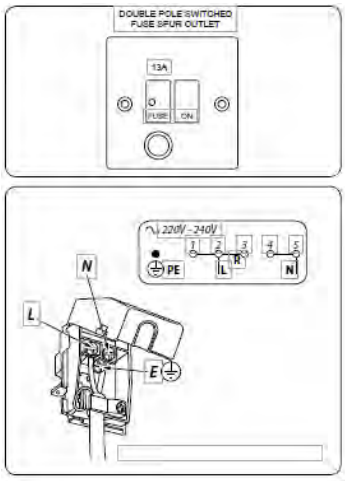

Oven must be installed to a switch that can cut all power to the appliance

Current Operated Earth Leakage Breakers

Where the installation is protected by a 30mA sensitivity residual current device (RCD), the combined use of your appliance and other domestic appliances may occasionally cause nuisance tripping. In these instances the kitchen circuit may need to be reconfigured. This work should be carried out by a qualified electrician.

Installing your Built-in Oven

Bringing it all together

Fitting on a Power Supply Cable

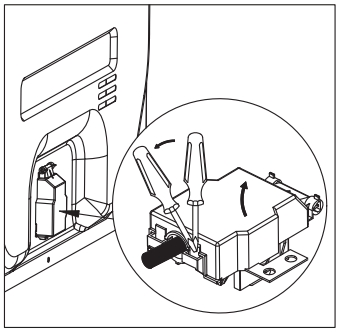

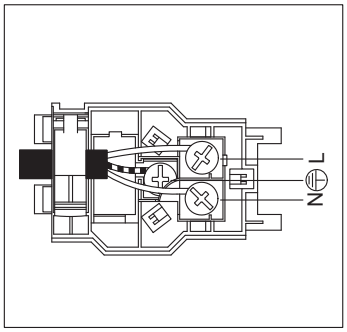

Opening the terminal board:

- Using a screwdriver ,prize the bolt on the side tabs of the terminal board cover ;
- Using a screwdriver unhooking the no.2fixing hooks, pull open the cover of the terminal board. To install the cable, proceed as follows:

- Remove the wire clamp screw and the three contact screws L-N - ⏚
- Fasten the wires beneath the screw heads using the following color scheme :Blue (N) Brown (L) Yellow-Green(E)
- Fasten the supply cable in place with the clamp and close the cover of the terminal board .

Open the terminal board

Fasten the wires beneath the screw heads

Fasten the supply cable in place with the clamp

Installing Shelves

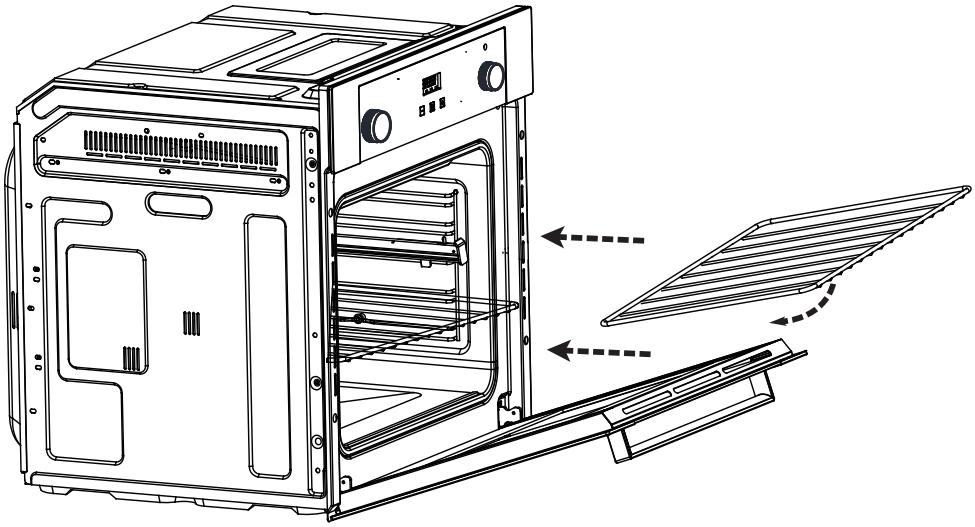

If you require any technical guidance or fi d that your product is not operating as intended, a simple solution can often be found in the **Troubleshooting** section of these instructions,

Using your Built-in Oven

4

Using your Built-in Oven

Getting started

A. Chrome wire shelf
B. 7 Function mode control knob
C. Mechanical minute minder
D. Temperature control knob
E. Oven lamp
F. Baking tray

If you require any technical guidance or find that your product is not operating as intended, a simple solution can often be found in the **Troubleshooting** section of these instructions,

Using your Built-in Oven

Getting the most from your appliance

Oven functions

Oven Light

Grill

Fan Grill

Convectional Heat

Fan Assisted

Lower Element with Fan

Defrost

Oven light -The oven light will operate on all oven functions.

Grill -This is the top heating element. The extremely high and direct temperature of the grill makes it possible to brown the surface of meats and roasts while locking the juices in to keep them tender. The grill is also highly recommended for dishes that require a high temperature on the surface: beef steaks, veal, rib steak, fillets, hamburgers etc.

Fan grill -This function uses the fan to circulate the heat from the grill element around the food. This helps prevent food from burning on the surface, allowing the heat to penetrate right into the food. Excellent results are achieved with kebabs made with meats and vegetables, sausages, ribs lamb chops, chicken in a spicy sauce, quail, pork chops, etc.

Convectional heat -This function uses the top and bottom heating elements. Natural convection creates a perfect cooking zone in the centre of the oven, ideal for dark fruit cakes and pastries or a joints of meat.

Fan Assisted - Using the top and bottom elements as well as the fan, this cooking function distributes the heat evenly around the oven to give an even temperature throughout. The function is ideal for baking or things like pizza as you can get a slight grilled effect whilst baking your food to perfection.

Lower Element with Fan - Gentle form of cooking. The function provides gentle heating using the base heat element and fan. Suitable for pastries, cakes and open tarts and quiches.

Defrost - When set to 'Defrost' mode, the fan located at the back of the oven circulates room temperature air around the food. This is recommended for the defrosting of all types of food, but in particular for delicate types of food which do not require heat, for example: ice cream cakes, cream or custard desserts, fruit cakes, etc. By using 'Defrost' mode, the defrosting time is approximately halved.

Using your appliance for the first time

The first time you use your appliance, we recommend that you set the temperature setting to the 250 degrees. Set the cooking mode selection knob to fan assisted mode and leave the oven on for 40-60 minutes with nothing in it and the oven door shut. Then, open the oven door and allow the oven to cool. Any odour that may be detected during this initial use is due to the evaporation of substances used to protect the oven during storage.

General oven and cooking tips

General Oven Tips

The wire shelves should always be pushed firmly to the back of the oven.
Baking trays with food cooking on them should be placed level with the front edge of the oven's wire shelves. Other containers should be placed centrally. Keep all trays and containers away from the back of the oven, as over-browning of the food may occur.
For even browning, the maximum recommended size of a baking tray is 340 mm (13½") by 340 mm (13½").
When the oven is on, do not leave the door open for longer than necessary, otherwise the knobs may get very hot.

Always leave 1-2cm between dishes on the same shelf. This allows the heat to circulate freely around them.

To reduce fat splashing when you add vegetables to hot fat around a roast, dry them thoroughly or brush lightly with cooking oil.

Where dishes may boil and spill over during cooking, place them on a baking tray.

Using the Grill

This multi-function oven has 2 different grilling modes.
Use the 'Grill' mode with the oven door closed, place the food on the center of the grill pan, insert and fit the grill pan on either the 3rd or 4th shelf from the bottom. Note: only the central part of the top heating element operates for grilling.
When using 'Grill' mode, we recommend you set the temperature to the highest setting. However, this does not mean you cannot use lower temperatures, simply adjust the knob to the desired temperature.
Use 'Fan assisted grill' mode with the oven door closed. This mode is very useful for grilling foods rapidly, as the distribution of heat by the fan makes it possible not only to brown the surface, but also to cook the bottom of the food. It can also be used for browning foods at the end of the cooking process, such as adding that gratin finish to pasta bakes.
When using 'Fan assisted grill' mode, place the food on the 2nd or 3rd oven shelf from the bottom, then place a dripping-pan on the 1st rack from the bottom to prevent fat and grease from dripping onto the oven floor. We recommend you set the temperature to 200°c, as it is the most efficient temperature for 'Fan assisted grill' mode. However, this does not mean you cannot use lower temperatures, simply adjust the knob to the desired temperature.
IMPORTANT: When using any of the oven functions you must cook with the oven door closed including when using a grill function.

General oven and cooking tips

Baking cakes

When baking cakes, always place them in a preheated oven. Make sure you wait until the oven has been preheated thoroughly (the indicator light will turn off). To prevent heat loss and the cake from dropping, do not open the oven door during baking.
In general...
... if pastry is too dry
Increase the temperature by 10°C and reduce the cooking time.
... if pastry has dropped
Use less liquid or lower the temperature by 10°C.
... if pastry is too dark on top
Place it on a lower shelf, lower the temperature, and increase the cooking time.
... if cooked well on the inside but sticky on the outside
Use less liquid, lower the temperature, and increase the cooking time.
... if the pastry sticks to the pan
Grease the pan well and sprinkle it with a dusting of flour or use greaseproof paper.
... if I used multi shelf cooking and one shelf is more cooked
Use a lower temperature setting next time. It is not necessary to remove the food from all the racks at the same time.

Cooking pizza -Suggested Fan Assisted Function

For best results when cooking pizza:

Preheat the oven for at least 10 minutes.

Use a light aluminum pizza pan, placing it on the shelf supplied with the oven. Don't use the dripping pan since this will extend the cooking time, making it difficult to get a crispy crust.

Do not open the oven door frequently while the pizza is cooking;

If the pizza has a lot of toppings (three or four), we recommend you add the mozzarella cheese on top halfway through the cooking process.

For best results, only use one shelf at a time, but if you want to cook on two shelves, use the 2nd and 4th racks from the bottom with a temperature of 220°c and swap them halfway through cooking.

General oven and cooking tips

Cooking fish and meat-Suggested cooking function

When cooking white meat, fowl and fish, use a temperature setting from 180°C to 200°c.
For red meat that you want well done on the outside while tender and juicy in the inside, it is best to start with a high temperature setting
(200°C-220°C) for a short time, then turn the oven down afterwards.
In general, the larger the roast, the lower the temperature setting. Place the meat on the centre of the shelf and place the dripping pan beneath it to catch the fat.
Make sure that the shelf is inserted so that it is in the centre of the oven. If you would like to increase the amount of heat from below, use a lower shelf height. For savoury roasts (especially duck and wild game), dress the meat with lard or bacon on the top.

Care and maintenance 5

Care and maintenance

Looking after your appliance

Cleaning

WARNING! Isolate the power supply to the appliance and make sure that the oven is cool.

Before cleaning your oven or performing maintenance switch off the power and make sure that the cooking mode selection knob and the cooking temperature selection knob are set to 'OFF'. To extend the life of your oven, it must be cleaned frequently.

The inside of the oven should preferable be cleaned immediately after use, when it is still warm (but not hot), with warm water and soap.
The soap should be rinsed away and the interior dried thoroughly. Avoid using abrasive detergents, scourers, acidic cleaners such as lime scale remover, etc, as these could damage the enamel, and can result in development of rust and corrosion. If stains are particularly tough to remove, use cleaners specifically recommended to clean ovens and follow the instructions provided with the cleaner.

Never use a steam cleaner for cleaning inside the oven.

Do not clean using caustic creams, abrasive cleaning powders, thick wire wool or hard tools. Enameled parts of the oven can be damaged if excess cleaning liquids are not immediately removed.
After cleaning the interior parts of the oven with a soapy cloth, rinse it and then dry thoroughly with a soft cloth.
Clean the glass surfaces with special glass cleaning agents.

Never use flammable agents like acid, thinner or petrol when cleaning your oven.

Do not clean your oven with a steam cleaner.

Do not wash any part of your oven in a dishwasher.

Enameled Parts:

In order to keep enameled parts as new, it is necessary to clean them frequently with mild warm soapy water and then dry with a cloth. Do not wash them while hot and never use abrasive powders or abrasive cleaning materials. Do not leave anything spilled onto enameled parts for long periods of time.

Stainless Steel:

Stainless steel parts must be cleaned frequently with mildly warm soapy water and a soft sponge and then dried with a soft cloth. Do not use abrasive powders or abrasive cleaning materials. Do not leave anything spilled on stainless steel parts for long periods of time.

Replacing the oven lamps

Replacement lamps are available from our support team. Please call 0345 257 7271.
Light source shall be replaced by professional.

WARNING: Ensure that the appliance is switched off before replacing the lamp to avoid the possibility of electric shock.
Remove the glass cover of the lamp-holder as shown below.

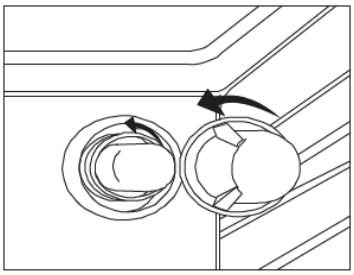

Remove the lamp and replace with a lamp resistant to high temperatures (300°C) with the following characteristics:
- Voltage: 220-240V
- Wattage: 25W
- Type: E 14 (Incandescent light)
- Energy efficiency class : G

Replace the glass cover and reconnect the oven to the mains power supply.

WARNING: Please do not use screwdrivers or other utensils to remove the light cover. This could damage the enamel of the oven or the lamp holder lamp holder.

PLEASE NOTE: The bulb replacement is not covered by your guarantee.

Removing the inner pane of Glass & Cleaning the Glass Door

1. Open door to a position you can view the screws on the edge of oven door. (See diagram eg Fig 1)
2. Using a screwdriver please remove the two screws as shown in the diagram (eg Fig 2)
3. Remove the bracket from the top of the oven door.
4. Now carefully remove the inner glass from the door.
5. Place the glass on a soft flat surface.
6. Clean the glass using non-abrasive products and sponges. Dry with a soft cloth.
7. Carefully place the glass back into the oven door frame.
8. Place the bracket back on the top of the glass and tighten the screws.

Fig 1

Fig 2

Care and maintenance

Looking after your appliance

Technical Specifications

Model - BIBCP/BIBGP
Voltage and Frequency - 220V-240V/ AC50Hz
Total Power - 2100-2500W
Oven usable Capacity - 56L
Energy Rating - A

We apologise for any inconvenience caused by minor inconstancies within these instructions that may occur due to product improvements and development
All images and drawings are for illustration purposes only.

Energy fiche

Brand		BUSH
Model		BIBCP/BIBGP
Type of Oven		ELECTRIC
Mass	kg	25.7(+/-2)
Energy Efficiency Index - conventional		80
Energy Efficiency Index - fan forced		80
Energy Class		A
Energy consumption (electricity) - conventional	kWh/cycle	0.75
Energy consumption (electricity) - fan forced	kWh/cycle	0.73
Number of cavities		1
Heat Source		ELECTRIC
Volume	l	56
This oven complies with EN 60350-1		

Energy Saving Tips

Oven
- Cook the meals together, if possible.

- Keep the pre-heating time short.

- Do not elongate cooking time.

- Do not forget to turn-off the oven at the end of cooking.

- Do not open oven door during cooking period.

Product support 6

Product support

Help is always at hand

Troubleshooting

PLEASE DO NOT attempt to repair this appliance yourself please contact the BUSH support contact centre on 0345 257 7271 or a qualified electrician.

Problem	Possible Cause
The oven does not heat up.	* The oven may not be switched on; switch the oven on. * A household fuse may have blown or a circuit braker may have tripped. If this happens continuously, call an authorised electrician.
A noise can be heard after a cooking programme.	* The cooling fan remains switched on after the end of a cooking program until the oven cools down.
The oven light / lamp is not working. 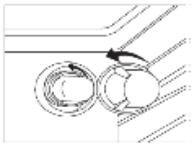	* Disconnect the appliances from the electricity supply: Switch off and unplug at the socket, or switch the power off at the isolator as appropriate. * Turn the lamp anti-clockwise to release it and then pull it downwards to take it out. * Replace it with a new halogen light * Refit the lamp cover and turn it clockwise to secure it * Reconnect the appliance to the mains electricity supply
Cakes and biscuits are browning unevenly.	* There will always be a slight unevenness. If browning is very uneven, check that the correct temperature was set and that the correct shelf level was used.
Steam is coming from the oven.	* When cooking foods with a high-water content (e.g. oven chips) there may be some steam visible at the top of the door. * Take care when opening the oven door as there may be a momentary puff of steam when the door is opened. * Stand well back and allow any steam to disperse.
The knobs get hot when using the oven or the grill. Can this be avoided?	* Yes, this is caused by the heat rising from the oven or the grill and heating them up. * Do not leave the oven door open. * Maker sure that the grill pan is pushed right back when grilling * Always grill with the compartment door closed.
Oven temperature is getting hotter as the cooker gets older.	* If turning the temperature down using the oven control knob has not worked, or has only worked for a short time, then you may need a new thermostat. * This should be fitted by a qualified service person
Grill is not cooking properly.	* Ensure you are using the pan and trivet supplied with the cooker * Ensure that the grill pan is placed in the upper part of the cavity; not on the base of the cavity * Ensure the grill pan is pushed all the way back
The oven is not cooking evenly.	* If you are cooking a large item, be prepared to turn it around during the cooking. * Ensure the shelves are in the correct positions.

If you require any technical guidance or find that your product is not operating as intended, a simple solution can often be found in the **Troubleshooting** section of these instructions,

Product support

Help is always at hand

Help and assistance

If you require any technical guidance or find that your Built-in Fan Oven is not operating as intended, a simple solution can often be found in the **Troubleshooting** section of these instructions or online at **www.bush-support.com**

If you still require further assistance, call one of our experts on **0345 257 7271***. To help give us give you a fast and efficient service please have the following information ready:

Model Ref.		You can find these on the rating plate - a small information panel (usually a sticker or metal plate) on the rear of your appliance
Serial number		
Date of purchase		This will be shown on your receipt

Local call rates applies*

Lines open 09:00- 17:30 Monday to Friday.

*Calls to Bush enquiry lines may attract a charge and set up fee from residential lines depending on your call plan/tariff. Mobile and other providers costs may vary, see www.bt.com/pricing for details.

For Security and training purposes, telephone calls to and from customer service centres maybe recorded and monitored. Calls from Republic of Ireland will attract international call charges.

Declaration of conformance to product standards

This appliance conforms to all relavant standards applicable to domestic appliances sold in the UK

Disposal

This appliance/fitting is marked according to the European directive 2012/19/EU on Waste Electrical and Electronic Equipment (WEEE). By ensuring this product is disposed of correctly, you will help prevent potential negative consequences for the environment and human health, which could otherwise be caused by inappropriate waste handling of this product.

The symbol on the product, or on the documents accompanying the product, the **crossed out wheelie bin** symbol, indicates that this appliance/fitting may not be treated as household waste. Instead it shall be handed over to the applicable collection point for the recycling of electrical and electronic equipment.

Disposal must be carried out in accordance with local environmental regulations for waste disposal.

For more detailed information about treatment, recovery and recycling of this product, please contact your local authority, your household waste disposal service or the retailer where you purchased the product.

BUSH

Call us now and activate your 12 month guarantee

Thank you for choosing Bush. Your new product is guaranteed against faults and breakdowns for 12 months. Don't forget to register it with us today so we can provide you with our best possible after-sales service and useful updates.

www.bushregistration.co.uk

FREEPHONE*

0800 597 8548

Lines open 09:00- 17:30 Monday to Friday.

Your Bush Guarantee

This product is guaranteed for twelve months from the date of original purchase. Any defect that arises due to faulty materials or workmanship will be repaired free of charge (or if applicable the product will be replaced or the purchase price refunded) where possible during this period by the dealer from who your purchased the unit.

The guarantee is subject to the following provisions:

- The guarantee does not cover accidental damage, misuse, cabinet parts, knobs or consumable items.
- The product must be correctly installed and operated in accordance with the instructions contained in the manual.
- It must be used solely for domestic purposes. The guarantee will be rendered invalid if the product is re-sold or has been damaged by inexpert repair.
- Specifications are subject to change without notice.
- Bush disclaim any liability for loss or damage arising from the breakdown of the product.
- This guarantee is in addition to and does not diminish your statutory or legal rights.

Important Data Protection Information

To find out how we and Domestic & General Insurance Plc use your data please refer to the guarantee registration material or visit www.bushregistration.co.uk

Guarantor: Argos Limited - London, EC1M 6HA, UK

or online at **www.argos-support.co.uk** If you still require further assistance, call one of our experts on **0345 257 7271**

BUSH

Contact:

www.argos-support.co.uk
www.bush-support.com
Helpline: 0345 257 7271
Produced in China for Argos Limited, London, EC1M 6HA, UK.
Argos (N.I.) Ltd, Forestside Shopping Centre, Upper Galwally, Belfast, BT8 6FX, UK.